LiftMaster®

MAXUM

Installation Manual

Industrial DC Operators

Models JDC, RJDC, JHDC, and TDC

DC Jackshaft, Hoist, and Trolley Doors up to 700, 1200, and 2200 lbs

NOT FOR RESIDENTIAL USE

- Please read this manual and the enclosed safety materials completely, prior to installation and use.
- This product is to be installed and serviced by a trained door systems technician ONLY.
- These operators are compatible with myQ, myQ Facility and Security+ 2.0 accessories which allow you to see, know and control what is happening at your facility, from anywhere.
- These operators are Wi-Fi® compatible.

Serial # _____

Installation Date _____

SCAN FOR BILT 3D INSTRUCTIONS

Scan here for LiftMaster support videos and content.

For more information, please visit www.devancocanada.com or call toll free at 1-855-931-3334

Table of Contents

Safety Information **3**
Safety Symbols and Signal Word Review 3
Door Sprockets (JDC/RJDC/JHDC Only) **4**
Door Sprockets (JDC/RJDC/JHDC Only) **5**
Introduction **6**
Voltage Selection 6
Model Decoder 6
Model Electrical Ratings 6
Operator Specifications **8**
Operator Dimensions **9**
Trolley (TDC) Operators **15**
Carton Inventory 15
Description 15
Hardware 15
Trolley (TDC) Assembly **16**
Assemble the Operator 16
Install the Chain 17
Trolley (TDC) Installation **18**
Install the Header Bracket 18
Attach the Track to the Header Bracket and Hang the Operator 19
Attach the Door Arm and Bracket 20
Jackshaft (JDC), Release (RJDC) and Hoist (JHDC) Operators **21**
Carton Inventory 21
Description 21
Door Sprockets 21
Manual Release (RJDC) Handing Switch (If Required) **22**
Disconnect Handing Re-Orientation 22
Jackshaft (JDC), Release (RJDC) and Hoist (JHDC) Assembly **23**
Configure the Operator 23
Battery Backup Installation (If Applicable) **24**
Installation for RJDC, JDC and JHDC **25**
Determine Mounting Location 25
Mount the Operator 25
Installing the Release Chain (RJDC Only) 26
Secure the Chain Hoist (JHDC) or Release Chain (RJDC) 26
Manual Release **27**
Emergency Disconnect - (TDC) Trolley 27
Emergency Disconnect - RJDC (Manual Release) and JHDC (Hoist) 27
Wiring **28**
Voltage Selection 28
Applying AC Power
Wall Controller Installation **29**
Headless Mode 29
Entrapment Protection **30**
Monitored Entrapment Protection 30
Install the Monitored Light Curtain (Optional) 31
Cable Tension Monitors **32**
Install the Cable Tension Monitor(s) (Optional) 32
Wiring Diagram **33**
Factory Wiring (View 1) 34
Factory wiring (View 2) 35
Top Field Wiring 36
Bottom Field Wiring (View 1) 37
Bottom Field Wiring (View 2) 38
Mounting Location 38
Programming **39**
LCD Icons and States 39
Quick Start Commissioning 39
Programming (Testing) **40**
Operating Modes 45
Determine and Set Operating Mode 46
Programmable Inputs 55
Radio 55
Programming Remote Controls and myQ® Devices 55
Resetting Remote Controls and myQ® Devices 55
Reset Defaults 55
Provisioning Wi-Fi 56
Resetting Wi-Fi Credentials 56
myQ® Smart Facility Access 56
Setup a myQ® Smart Facility Access Account 56
Auxiliary Relays Accessory Kit (AUXREL) **57**
Configure the Relay Adapter 57
Wiring iDock Controller to LiftMaster Maxum Operator **58**
Troubleshooting **61**
Maintenance **83**
Accessories **84**
Service Parts **88**
For JHDC Models Only (Service Kits) 89
For RJDC Models Only (Service Kits) 89
Common Service Kits For JDC, RJDC, JHDC, TDC 90
For 2200 Models Only 90
Warranty **91**

myQ® Connectivity

- myQ® Smart Facility Access Technology enables secure monitoring and control of door operators and other myQ® Smart Facility Access devices with a smartphone, tablet or computer.
- Alerts can be received as email notifications, ensuring the status of a commercial door.

Safety And Security

Security+ 2.0® – with every press of the button, a new code is sent to the commercial door operator, ensuring a door will only open for the remote control programmed.

UL 325 requires all commercial door operators to be either constant pressure to close or be equipped with a primary external monitored entrapment protection device.

LiftMaster® is the leading brand of professionally installed commercial door operators and access control products for businesses worldwide. We are committed to quality products, innovative designs and comprehensive services which exceed our Customers' expectations.

Safety Information

Safety Symbols and Signal Word Review

WARNING

Mechanical

WARNING

Electrical

When you see these Safety Symbols and Signal Words on the following pages, they will alert you to the possibility of ***serious injury or death*** if you do not comply with the warnings that accompany them. The hazard may come from something mechanical or from electric shock. Read the warnings carefully.

CAUTION

When you see this Signal Word on the following pages, it will alert you to the possibility of damage to your door and/or the door operator if you do not comply with the cautionary statements that accompany it. Read them carefully.

IMPORTANT NOTES:

- BEFORE attempting to install, operate or maintain the commercial door operator, you must read and fully understand this manual and follow all safety instructions.
- DO NOT attempt repair or service of a commercial door operator unless you are an Authorized Service Technician.
- A commercial door operator should only be installed on a properly balanced door. Ensure door is properly balanced prior to installation.

ENTRAPMENT PROTECTION DEVICES

Monitored Entrapment Protection

Monitored photoelectric sensors and/or door edge sensors are required for any momentary contact to close modes of operation. See "Entrapment Protection" section for additional information. Refer to the Entrapment Protection Devices in "Accessories" section for available options.

WARNING: This product can expose you to chemicals including lead, which are known to the State of California to cause cancer or birth defects or other reproductive harm. For more information go to www.P65Warnings.ca.gov.

WARNING

To reduce the risk of SEVERE INJURY or DEATH:

1. READ AND FOLLOW ALL INSTALLATION WARNINGS AND INSTRUCTIONS.
2. Install door operator ONLY on properly balanced and lubricated door. An improperly balanced door may NOT reverse when required and could result in SEVERE INJURY or DEATH.
3. ALL repairs to cables, spring assemblies and other hardware MUST be made by a trained door systems technician BEFORE installing operator.
4. Disable ALL locks and remove ALL ropes connected to door BEFORE installing operator to avoid entanglement.
5. Install an operator, a minimum of 8 feet (2.44 m) from the floor.
6. NEVER connect a door operator to a power source until instructed to do so.
7. NEVER wear watches, rings or loose clothing while installing or servicing an operator. They could be caught in the door or operator mechanisms.
8. Install a wall controller:
   - within sight of the door.
   - out of reach of small children and at a minimum height of 5 feet (1.5 m) above floors, landings, steps, or any other adjacent walking surface.
   - away from ALL moving parts of the door.
9. Install the wall controller far enough from the door to prevent the user from coming in contact with the door while operating the controls.
10. Install the entrapment warning placard on the wall next to the wall controller in a prominent location, visible from the door.
11. Place the manual release/ safety reverse test label in plain view on the inside of door.
12. Upon completion of installation, test the entrapment protection device(s).
13. This door operator is not intended to replace door locks. With enough force, a door without a door lock can be opened. LiftMaster always recommends the use of door locks to properly secure a door.
14. SAVE THESE INSTRUCTIONS.

Door Sprockets (JDC/RJDC/JHDC Only)

NOTE: *The latest Installation Manual can be found at liftmaster.com.*

NOTE: *JDC, RJDC and JHDC 700 / 1200 models come with a 12-tooth drive sprocket pre-installed. JHDC 2200 models come with a 10-tooth drive sprocket pre-installed. 10-tooth sprocket kit is available to convert 12-tooth operators in the field (Part # 71-1550B10LGH). Reducing drive sprocket size will reduce door speed, or allow for using a smaller door sprocket at same door speed.*

Example: Door Sprocket Reduction (Keeping door speed the same)

Door Type	12-Tooth Drive Sprocket	10-Tooth Drive Sprocket
Sectional	42-Tooth	32-Tooth
Rolling Steel	60-Tooth	50-Tooth

Sectional Door Sprocket Recommendations for 12-Tooth (700/1200) & 10-Tooth (2200) Operator Sprockets

Drum Diameter	Recommended Door Sprocket for Desired Speed					
	For 10-12 in/sec			For 9-10 in/sec		
	Sprocket Tooth Count	1 in. Bore, 1/4 in. Keyway	1.25 in. Bore, 1/4 in. Keyway	Sprocket Tooth Count	1 in. Bore, 1/4 in. Keyway	1.25 in. Bore, 1/4 in. Keyway
4"	16	71-1550B16LGH	71-1550B16QGH	24	71-1550B24LGH	71-1550B24QGH
5.25" to 5.75" & 8.5" Vertical Lift	24	71-1550B24LGH	71-1550B24QGH	32	71-1550B32LGH	71-1550B32QGH
6.375" to 11"	32	71-1550B32LGH	71-1550B32QGH	42	71-1550B42LGH	71-1550B42QGH
13.5	42	71-1550B42LGH	71-1550B42QGH	56	71-1550B56LGH	71-1550B56QGH

Rolling Door Sprocket Recommendations for 12-Tooth Operator Sprocket (700/1200)

Uninsulated Rolling Doors/Grilles up to 20ft in Height - 8-9in/s			Insulated Rolling Door - Max 20ft Height - 8-9 in/s		
Operator Series	Door Weight	Sprocket Tooth Count	Operator Series	Door Weight	Sprocket Tooth Count
700	up to 450 lbs	50	700	up to 450 lbs	60
	450 to 700 lbs	72			
1200	700 to 1200 lbs		1200	450 to 900 lbs	72
	1200 to 1800 lbs				

Door Sprockets (JDC/RJDC/JHDC Only)

Rolling Door Sprocket Recommendations for 10-Tooth Operator Sprocket (Standard for JHDC 2200 - Available as accessory kit for 700/1200 - part # 71-1550B10LGH)

Uninsulated Rolling Door - Max 20ft Height - 8-9 in/s			Insulated Rolling Door - Max 20ft Height - 8-9 in/s		
Operator Series	**Door Weight**	**Sprocket Tooth Count**	**Operator Series**	**Door Weight**	**Sprocket Tooth Count**
700	up to 450 lbs	42	700	up to 450 lbs	50
	450 to 700 lbs	56	1200	450 to 900 lbs	60
1200	700 to 1200 lbs				
2200	1200 to 1800 lbs		2200	900 to 2200 lbs	72
	1800 to 2200 lbs	72			

For Sectional Doors, if unsure on the door drum diameter, choose the 32-tooth door sprocket. See table below for recommendation by operator.

Operator Series	Drum Diameter	Desired Door Speed	Sprocket Tooth Count	1 in. Bore, 1/4 in. Keyway	1.25 in. Bore, 1/4 in. Keyway
700	Not Sure	12"/sec	22	71-1550B22LGH	71-1550B22QGH
700	Not Sure	9"/sec	32	71-1550B32LGH	71-1550B32QGH
1200	Not Sure	12"/sec	22	71-1550B22LGH	71-1550B22QGH
1200	Not Sure	9"/sec	32	71-1550B32LGH	71-1550B32QGH
2200	Not Sure	10"-12"/sec	32	71-1550B32LGH	71-1550B32QGH

* Sprockets will no longer be included in the box.

Introduction

Voltage Selection

Voltage Selection	
120/240V single and 3 phase	Dedicated SKU
480V 3 phase	Dedicated SKU
208V 3 phase	Via accessory step down transformer
600V 3 phase	Via accessory step down transformer

Model Decoder

Voltage Selection	Motor	Door Weight	Duty Cycle	Voltage	Battery Backup Capable	Extended Shaft / MC	Handing
J (Jackshaft, no Hoist, no Release)	**DC**	7 (Up to 700lb Doors)	S (Standard)	1 (120/240V single or 3 phase) 4 (480V 3 phase)	B (includes BBU)	E (Extended Shaft) MC (no significance)	Dual Handed
RJ (Jackshaft with Release)	**DC**	7 (Up to 700lb Doors)	S (Standard)	1 (120/240V single or 3 phase) 4 (480V 3 phase)	B (BBU Capable, not included)	E (Extended Shaft)	L (Left-Handed) R (Right-Handed)
JH (Jackshaft with Hoist)	**DC**	7 (Up to 700lb Doors) 12 (Up to 1200lb Doors) 22 (Up to 2200lb Doors)	S (Standard) X (Extended)	1 (120/240V single or 3 phase) 4 (480V 3 phase)	B (BBU Capable, not included)	E (Extended Shaft) MC (no significance)	Dual Handed
T (Trolley)	**DC**	7 (Up to 700lb Doors) 12 (Up to 1200lb Doors) 22 (Up to 2200lb Doors)	S (Standard) X (Extended)	1 (120/240V single or 3 phase) 4 (480V 3 phase)	B (BBU Capable, not included)	MC (no significance)	Not applicable

Model Electrical Ratings

Model	Operator Type	Electrical Rating	Cycle	Max. Door Weight
RJDC7S1BEL	Jackshaft w/ Manual Release, non-hoisted Operators 3in Shaft	120Vac, 5A, 1PH; 240Vac, 2.5A, 1PH/3PH*	Standard Cycle	700 lbs
RJDC7S4BEL		480Vac, 1.25A, 1PH/3PH*		
RJDC7S1BER		120Vac, 5A, 1PH; 240Vac, 2.5A, 1PH/3PH*		
RJDC7S4BER		480Vac, 1.25A, 1PH/3PH*		
JDC7S1BMC	Jackshaft non-hoisted Operators	120Vac, 5A, 1PH; 240Vac, 2.5A, 1PH/3PH**	Standard Cycle	700 lbs
JDC7S4BMC		480Vac, 1.25A, 1PH/3PH**		
JDC7S1BE	Jackshaft non-hoisted Operators 3in Shaft	120Vac, 5A, 1PH; 240Vac, 2.5A, 1PH/3PH**	Standard Cycle	700 lbs
JDC7S4BE		480Vac, 1.25A, 1PH/3PH**		

Introduction (continued)

Model	Operator Type	Electrical Rating	Cycle	Max. Door Weight
JHDC7S1BMC	Hoist Operators	120Vac, 5A, 1PH; 240Vac, 2.5A, 1PH/3PH*	Standard Cycle	700 lbs
JHDC7S4BMC		480Vac, 1.25A, 1PH/3PH*		
JHDC12S1BMC		120Vac, 9A, 1PH; 240Vac, 4.5A, 1PH/3PH*		1200 lbs
JHDC12S4BMC		480Vac, 3A, 1PH/3PH*		
JHDC12X1BMC		120Vac, 10A, 1PH; 240Vac, 5A, 1PH/3PH*	Extended Cycle	
JHDC12X4BMC		480Vac, 3.5A, 1PH/3PH*		
JHDC7S1BE	Hoisted Operators 3in Shaft	120Vac, 5A, 1PH; 240Vac, 2.5A, 1PH/3PH*	Standard Cycle	700 lbs
JHDC7S4BE		480Vac, 1.25A, 1PH/3PH*		
JHDC12S1BE		120Vac, 9A, 1PH; 240Vac, 4.5A, 1PH/3PH*		1200 lbs
JHDC12S4BE		480Vac, 3A, 1PH/3PH*		
JHDC12X1BE		120Vac, 10A, 1PH; 240Vac, 5A, 1PH/3PH*	Extended Cycle	
JHDC12X4BE		480Vac, 3.5A, 1PH/3PH*		
JHDC22X1BMC		120Vac, 10A, 1PH; 240Vac, 5A, 1PH/3PH*		2200 lbs
JHDC22X4BMC		480Vac, 3.5A, 1PH/3PH*		
TDC7S1BMC	Trolley Operators	120Vac, 5A, 1PH; 240Vac, 2.5A, 1PH/3PH*	Standard Cycle	700 lbs
TDC7S4BMC		480Vac, 1.25A, 1PH/3PH*		
TDC12S1BMC		120Vac, 9A, 1PH; 240Vac, 4.5A, 1PH/3PH*		1200 lbs
TDC12S4BMC		480Vac, 3A, 1PH/3PH*		
TDC12X1BMC		120Vac, 10A, 1PH; 240Vac, 5A, 1PH/3PH*	Extended Cycle	
TDC12X4BMC		480Vac, 3.5A, 1PH/3PH*		
TDC22X1BMC		120Vac, 10A, 1PH; 240Vac, 5A, 1PH/3PH*		2200 lbs
TDC22X4BMC		480Vac, 3.5A, 1PH/3PH*		

* BBU capable
** BBU included

Operator Specifications

Duty Cycles:

- Standard: 20 cycles per hour
- Extended: 30 cycles per hour
- Battery Backup (BBU): 20 cycles (fully charged, within 48 hours of AC power failure)

Wall Controller: NEMA 1 General Purpose 3-Button Wall Controller Open/Close/Stop, LCD Display, and floor level commissioning through intuitive user menu.

Operation Mode: C2 (Factory default), B2, B2/T, B2/TS, D1, E2 and FSTS.

Brake: Standard Dynamic braking on 700, 1200, 2200; 2200 series include electromechanical holding brake.

Disconnect:

- RJDC: Manual release included to disconnect operator from door by pulling sash chain.
- JDC: No disconnect, include battery backup for operating door during AC power failure.
- JHDC: Engage rope (green) and disengage rope (red) to electronically disable operator controls and manually move door with hoist chain.
- TDC: Quick disconnect door arm for manual door movement.

Mechanical Drive Reduction:

- Models RJDC, JDC and JHDC: 65:1 gearbox with #50 chain output.
- Model TDC: 65:1 gearbox with #48 chain output on 700 units and #41 chain output on 1200 and larger units.

Door Speed:

Fine adjustments are made via Wall Controller menu; if you want to slow down the operator, please adjust via sprocket choice:

- Model RJDC: 12" per second for section and 8-9" per second for rolling steel doors.
- Model JDC: 12" per second for sectional and 8-9" per second for rolling steel doors.
- Model JHDC: 12" per second for sectional and 8-9" per second for rolling steel doors.
- Model TDC: 12" per second for sectional doors.

Limit Adjust: Electronic limits - floor level adjustability.

Temperature Ratings:

- Without heater: -4°F (-20°C) to +149°F (65°C)
- With heater kit*: -40°F (-40°C) to +149°F (65°C)

  *Optional accessory for RJDC, JDC and JHDC models (requires enclosure)
- ENVIRONMENT: For indoor use only.

Max. Door Weight: See Operator Charts which include Door Weight and Height information.

Door Dim: See Operator Charts which include Door Weight and Height information.

Important Safety Instructions

WARNING

To reduce the risk of SEVERE INJURY or DEATH:

1. READ AND FOLLOW ALL WARNINGS AND INSTRUCTIONS.
2. ALWAYS keep remote controls out of reach of children. NEVER permit children to operate or play with door control push buttons or remote controls.
3. ONLY activate a door when it can be seen clearly, it is properly adjusted and no obstructions exist in the path the door will travel.
4. Personnel should keep away from a door in motion and ALWAYS keep a door in sight until completely closed. NO ONE SHOULD CROSS THE PATH OF A MOVING DOOR.
5. NO ONE SHOULD GO UNDER A STOPPED OR PARTIALLY OPENED DOOR.
6. If possible, use the manual release handle to disengage a door ONLY when a door is CLOSED. Weak or broken springs or an unbalanced door could result in an open door falling rapidly and/or unexpectedly causing SEVERE INJURY or DEATH.
7. NEVER use manual release handle unless the doorway is clear of persons and obstructions.
8. After ANY adjustments are made, the entrapment protection device(s) MUST be tested. Failure to adjust the operator properly may cause SEVERE INJURY and DEATH.
9. Entrapment protection device(s) MUST be tested every month. Failure to adjust the operator properly may cause SEVERE INJURY and DEATH.
10. ALWAYS KEEP DOOR PROPERLY BALANCED. An improperly balanced door may NOT reverse when required and could result in SEVERE INJURY or DEATH. See the door manufacturer's owners manual.
11. ALL repairs to cables, spring assemblies and other hardware, ALL of which are under EXTREME tension, MUST be made by an Authorized Service Technician.
12. ALWAYS disconnect electric power to the door operator BEFORE making ANY repairs or removing covers.
13. NEVER try to loosen or remove an obstruction that has impeded the movement of the door. Both the obstruction and door are under EXTREME tension and loosening or removing an obstacle, impeding the movement of the door, can cause SERIOUS PERSONAL INJURY.
14. NEVER stand under a door that has been impeded by an obstruction. KEEP CLEAR. Door could move freely at any time and can cause SERIOUS PERSONAL INJURY.
15. If the door should be obstructed or impeded in its movement, ALWAYS call an Authorized Trained Service Technician to clear that obstruction.
16. SAVE THESE INSTRUCTIONS.

Operator Dimensions

Jackshaft (Models JDC7S1BMC and JDC7S4BMC)

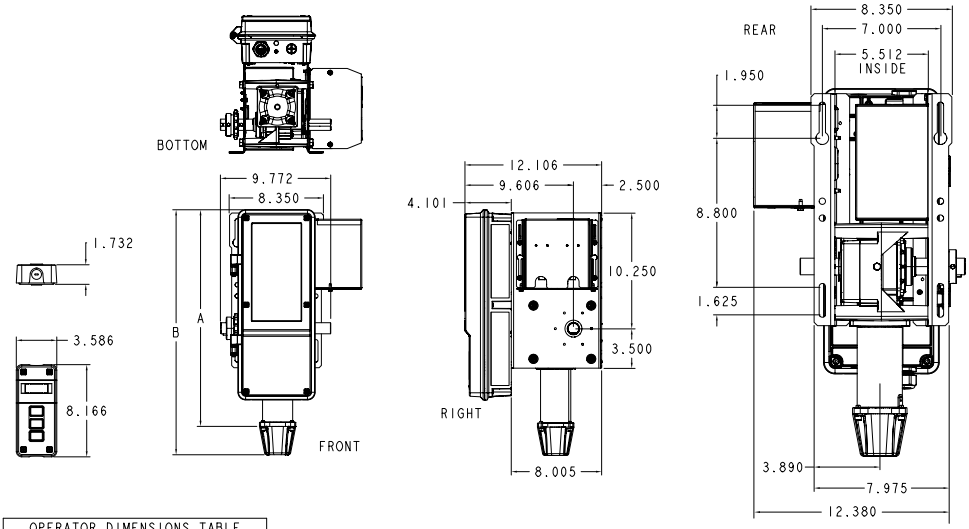

OPERATOR DIMENSIONS TABLE		
	DIMENSIONS	
	A	B
700LB STD	19.187"	21.701"

Hoist (Models JHDC7S1BMC, JHDC7S4BMC, JHDC12S1BMC, JHDC12S4BMC, JHDC12X1BMC, JHDC12X4BMC)

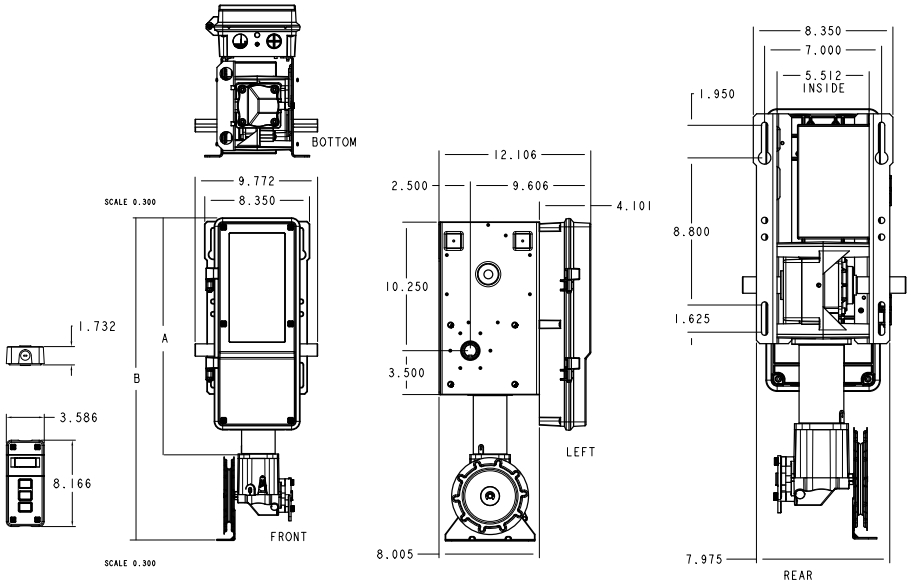

OPERATOR DIMENSIONS TABLE		
	DIMENSIONS	
	A	B
700LB STD	19.1867"	25.7279"
1200LB STD	19.5017"	26.0428"

Operator Dimensions (continued)

Jackshaft with 3 Inch Shaft (Models JDC7S1BE and JDC7S4BE)

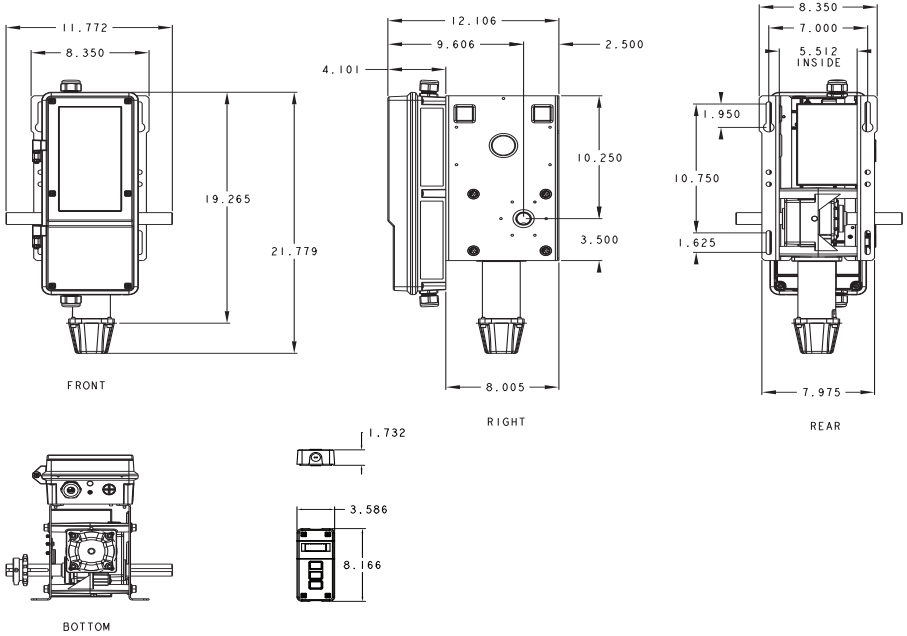

Hoist with 3 Inch Shaft (Models JHDC7S1BE and JHDC7S4BE)

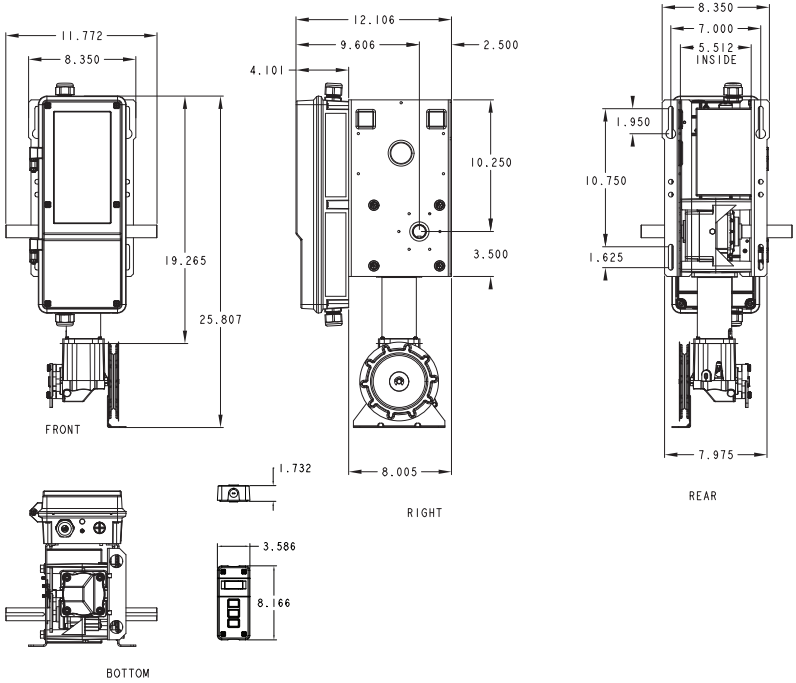

Operator Dimensions (continued)

Hoist 1200 Standard Duty with 3 Inch Shaft (Models JHDC12S1BE and JHDC12S4BE)

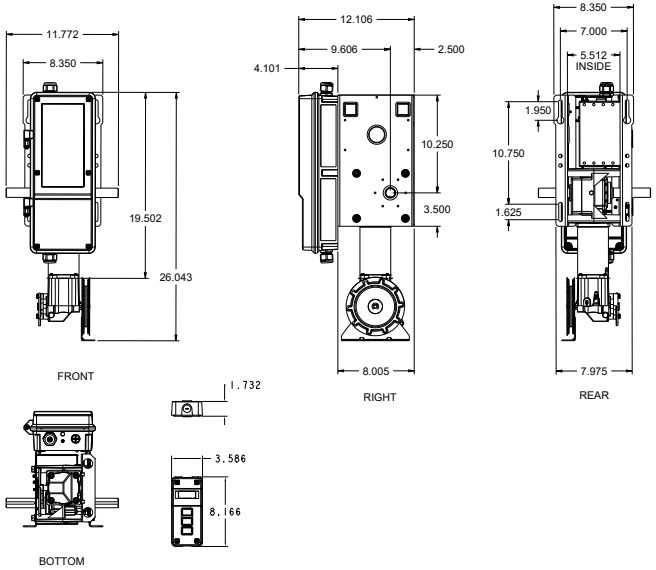

Hoist 1200 Extended Duty with 3 Inch Shaft (Models JHDC12X1BE and JHDC12X4BE)

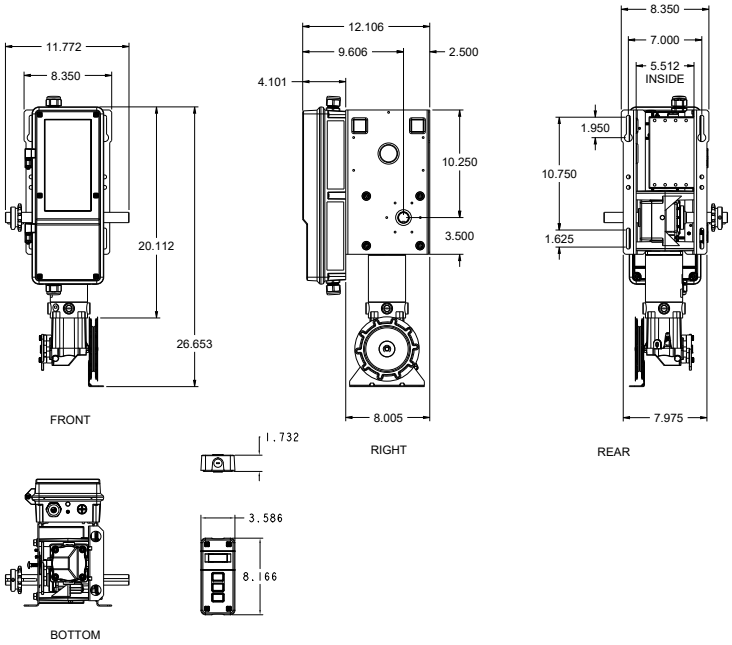

Operator Dimensions (continued)

RJDC7 with 3 Inch Shaft (Left-Hand)

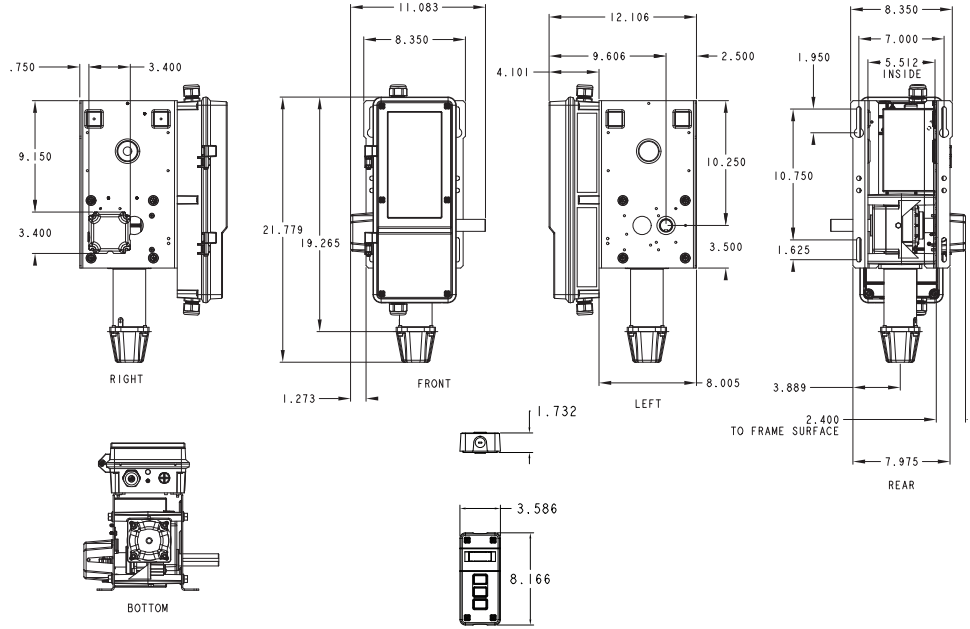

RJDC7 with 3 Inch Shaft (Right-Hand)

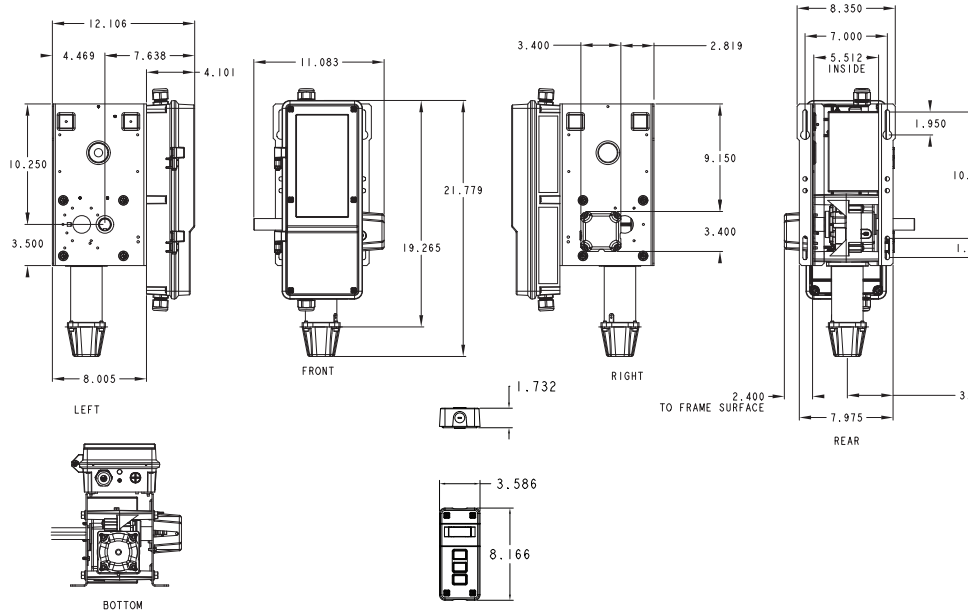

Operator Dimensions (continued)

2200 Hoist with 3 Inch Shaft (Models JHDC22X1BMC and JHDC22X4BMC)

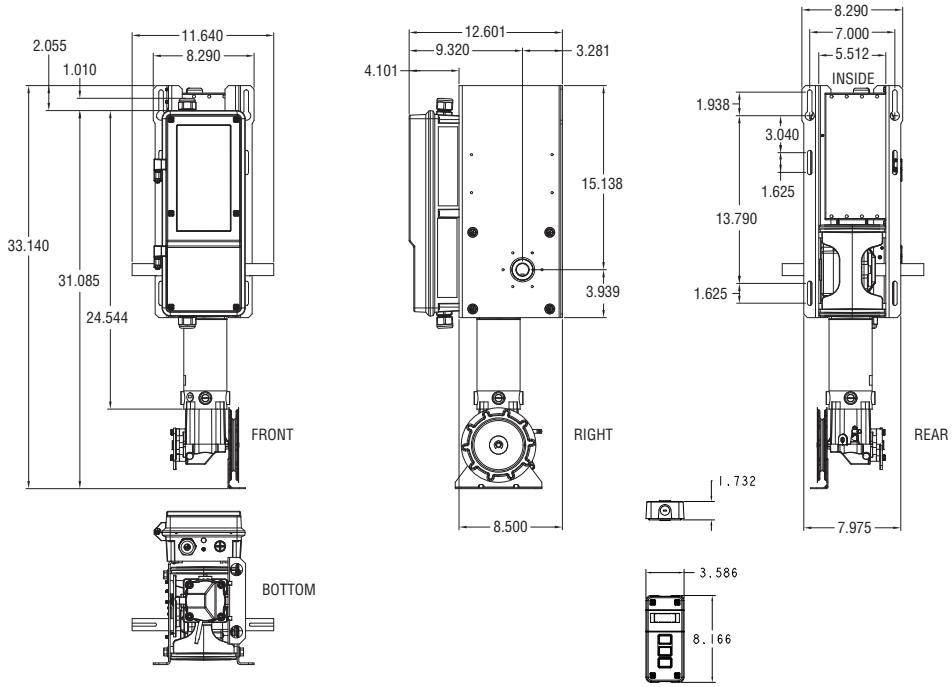

2200 Trolley (Models TDC22X1BMC and TDC22X4BMC)

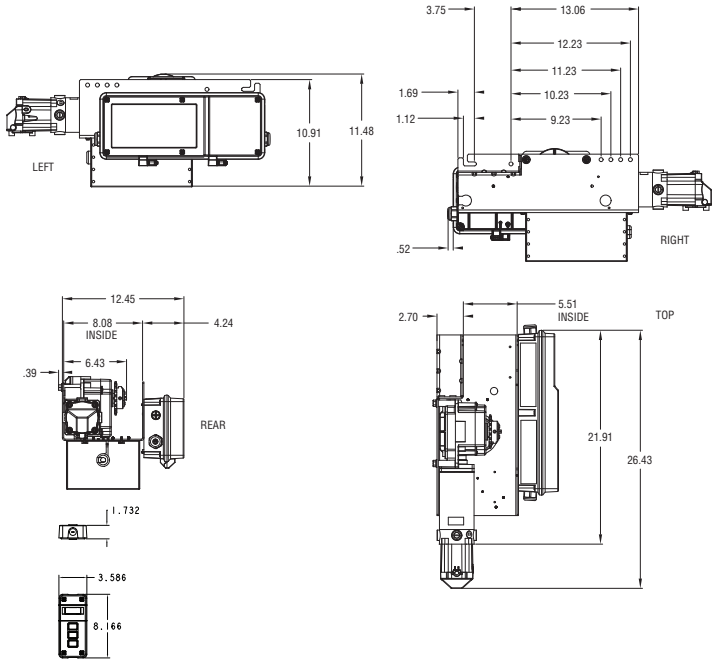

Operator Dimensions (continued)

Trolley (TDC)

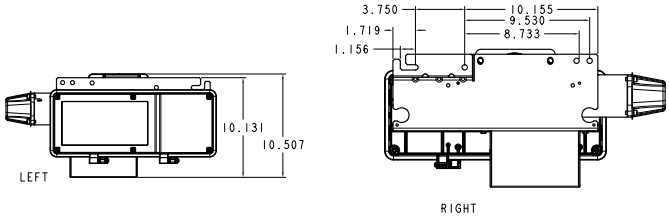

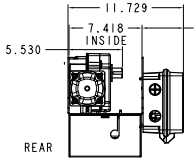

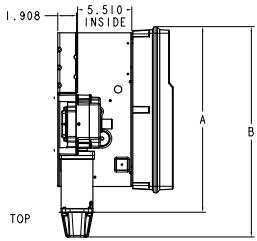

OPERATOR DIMENSIONS TABLE		
	DIMENSIONS	
	A	B
700LB STD	18.552"	21.065"
1200LB STD	18.867"	21.380"

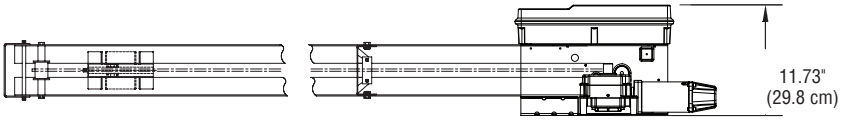

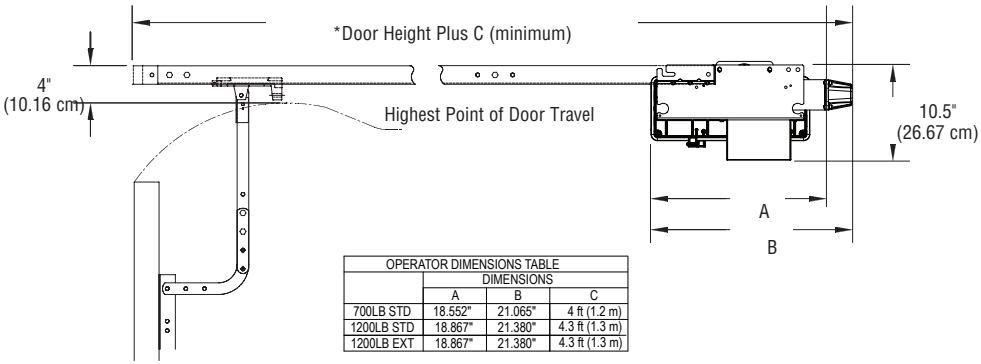

OPERATOR DIMENSIONS TABLE			
	DIMENSIONS		
	A	B	C
700LB STD	18.552"	21.065"	4 ft (1.2 m)
1200LB STD	18.867"	21.380"	4.3 ft (1.3 m)
1200LB EXT	18.867"	21.380"	4.3 ft (1.3 m)

Battery Backup

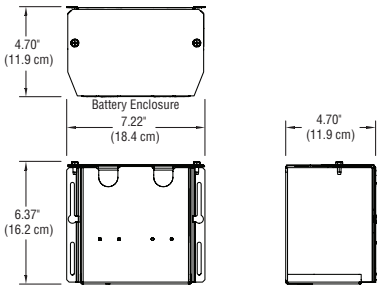

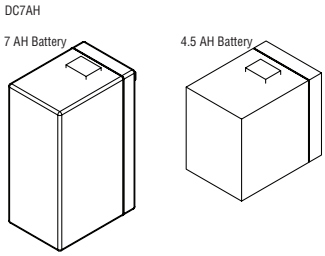

Trolley (TDC) Operators

WARNING

To prevent possible SERIOUS INJURY or DEATH:

- DO NOT connect electric power until instructed to do so.
- If the door lock needs to remain functional, install an interlock switch.
- ALWAYS call an Authorized Service Technician if door binds, sticks, or is out of balance. An unbalanced door may NOT reverse when required.
- NEVER try to loosen, move, or adjust doors, door springs, cable, pulleys, brackets, or their hardware. ALL of which are under EXTREME tension and can cause SERIOUS PERSONAL INJURY.
- Disable ALL locks and remove ALL ropes connected to door BEFORE installing and operating door operator to avoid entanglement.
- Fasten the operator SECURELY to structural supports of the building.
- Concrete anchors MUST be used in installing ANY brackets.

Carton Inventory

Your door operator is packaged in one carton which contains the motor unit and the items below. If anything is missing, carefully check the packing material.

Description

- Operator assembly
- Installation manual and warning placards
- Hardware box
- Floor level Wall Controller with LCD display
- LiftMaster Monitored Entrapment Protection, CPS-U Photoelectric Sensors
- Extra trolley drive chain for retrofit installations.

NOTE: *Trolley tracks and drive chain are ordered and shipped separately from operator packaging.*

Hardware

- Fasteners
- Track spacers
- Trolley
- Door arm assembly
- Front idler
- Header mounting bracket

Trolley (TDC) Assembly

Assemble the Operator

1. Install the track spacers evenly over the length of the track. Fasten the spacers to the track with bolt (A) and flange hex nuts (B).

Spacers Provided	Track Length
2	8-14 foot
3	16-20 foot
4	22-24 foot

2. Install the front idler to the track with bolts (F) and washers (D).
3. Assemble the trolley with the take up bolt (C), hex nuts (E), and lock washer (D).
4. Slide the trolley onto the track.
5. Insert bolts (A) into the end of the track and loosely thread the nuts (B) onto the ends of the bolts.
6. Slide bolts (A) on the end of the track assembly into the "L" slot in the operator and tighten nuts (B). Insert bolts (A) into the holes on the end of the track and the operator. Secure the track with nuts (B).

HARDWARE

A Bolt 3/8"-16 x 3/4"

B Flange Hex Nut 3/8"-16

C Take Up Bolt

D Lock Washer 3/8"

E Hex Nut 3/8"-16

F Bolt 3/8"-16 x 1"

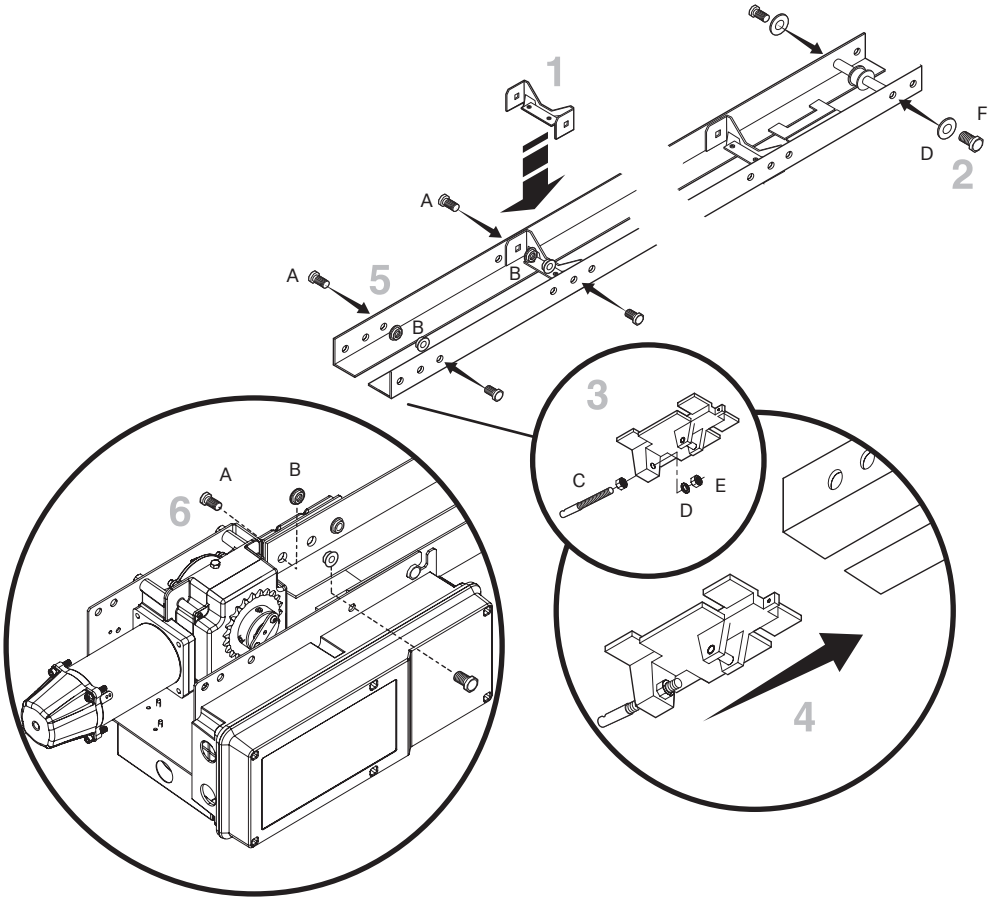

Trolley (TDC) Assembly (continued)

Install the Chain

The chain is packed separately from the operator. Please ensure you have your chain before starting installation.

1. Position the trolley 2 inches (5.1 cm) away from the front idler.
2. Attach the chain to the trolley threaded shaft using the master link.
3. Run the chain along the track to the operator. Wrap the chain around the operator drive sprocket.
4. Run the chain along the track to the front idler. Wrap the chain around the front idler.
5. Attach the chain to the front of the trolley using the master link.
6. Tighten the chain until the chain sags about 3 inches (7.6 cm) at the mid point of the track.
7. For retrofit trolley installations, use an additional 16" of chain for the installation.

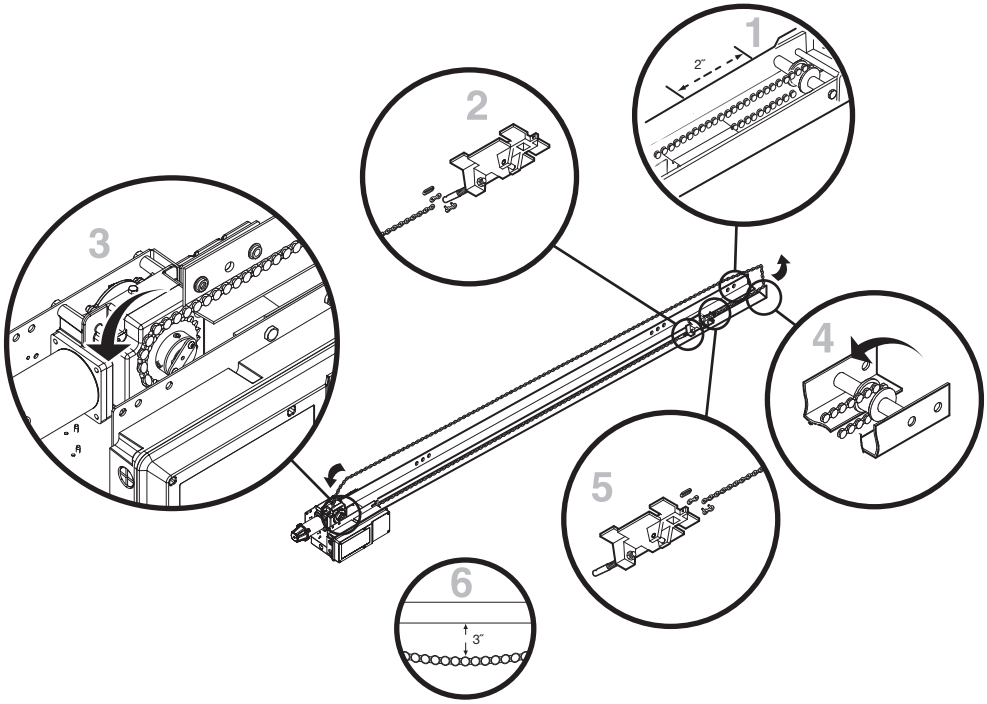

Trolley (TDC) Installation

Install the Header Bracket

The trolley operator is generally mounted over the center of the door. However, off center mounting may be required due to interfering structures or location of the door stile / top section support. Typically, the operator may be mounted up to 24 inches (60.1 cm) off center on torsion spring doors. Extension springs require center mounting.

1. Close the door. Mark the center of the door with a vertical line, extend the line onto the ceiling.
2. Open the door to the highest point of travel mark 4 inches (10.1 cm) above the highest point of travel.
3. Center the header bracket on the vertical center line and the horizontal line.
4. Drill the pilot holes for the header bracket.
5. Fasten the header bracket with appropriate hardware (not provided).

⚠ WARNING

To prevent possible SERIOUS INJURY or DEATH:

- Header bracket MUST be RIGIDLY fastened to the structural support on the header wall or ceiling, otherwise the door might NOT reverse when required. DO NOT install the header bracket over drywall.
- Concrete anchors MUST be used if mounting the header bracket or 2x4 into masonry.
- NEVER try to loosen, move or adjust door, springs, cables, pulleys, brackets, or their hardware, ALL of which are under EXTREME tension.
- ALWAYS call an Authorized Service Technician if door binds, sticks, or is out of balance.

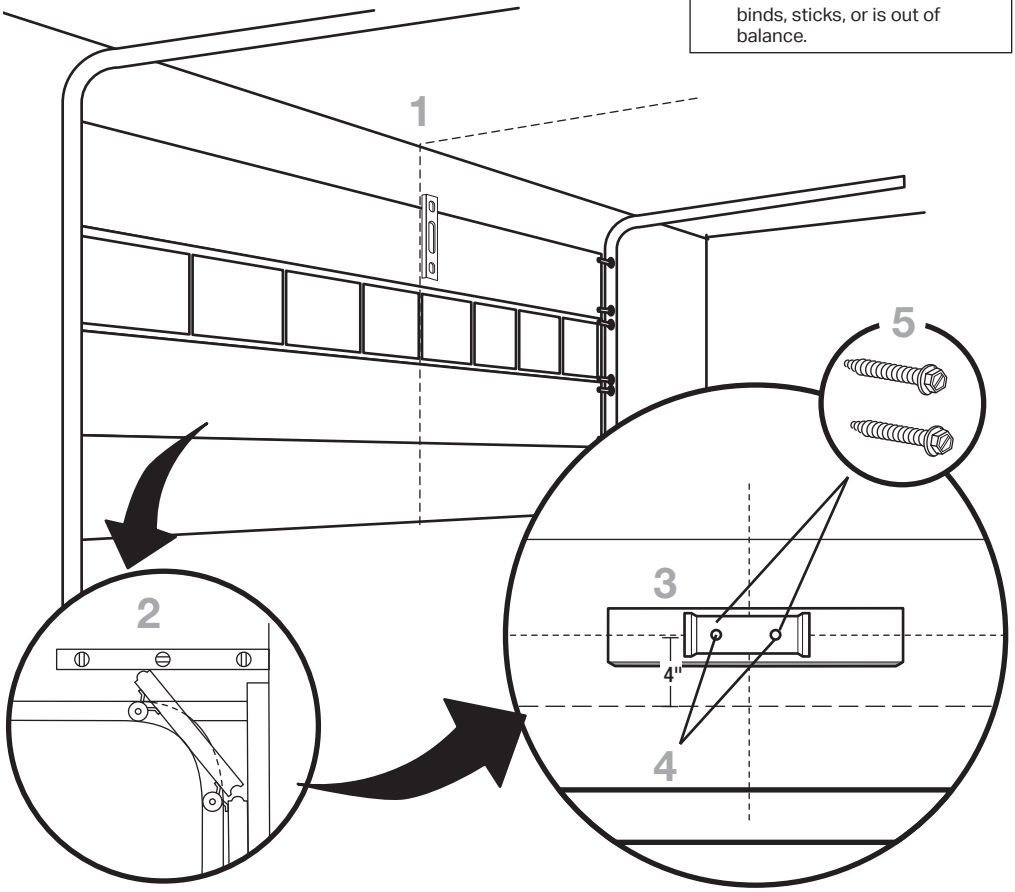

Trolley (TDC) Installation (continued)

Attach the Track to the Header Bracket and Hang the Operator

1. Align the track with the header bracket.
2. Insert the clevis pin through the track and header bracket holes. Secure with the fasteners.
3. Swing the operator up and ensure the operator is level.
4. Secure the operator using the appropriate fasteners and locking hardware to support the weight of the operator.

WARNING

To avoid possible SERIOUS INJURY from a falling operator:

- Fasten the operator SECURELY to structural supports of the building.
- Concrete anchors MUST be used if installing ANY brackets into masonry.

HARDWARE

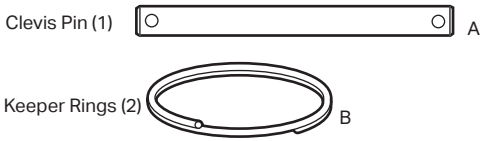

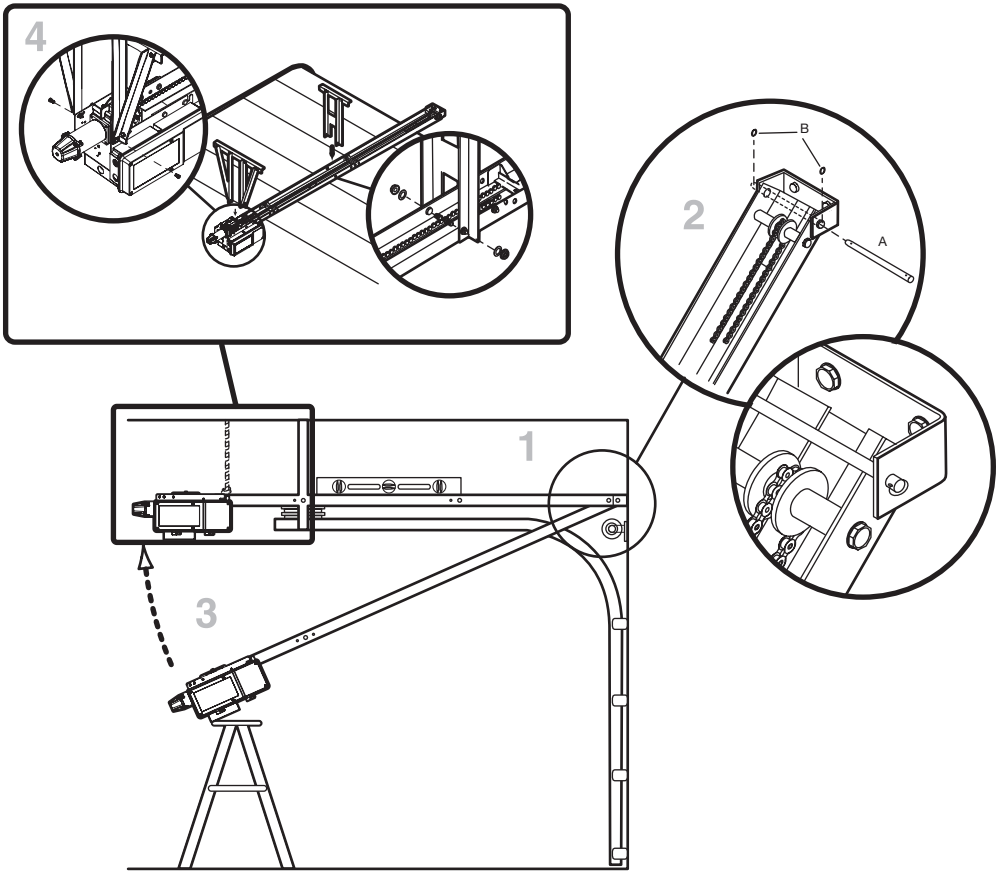

Trolley (TDC) Installation (continued)

Attach the Door Arm and Bracket

1. Latch the door arm to the trolley. Make sure the open side of the notch on the door arm faces the door.
2. Position the door bracket to the center line of the door and attach the door bracket to the door using appropriate hardware (not included).

   NOTE: *When properly installed and adjusted the door arm should be leaning back toward the operator slightly. Refer to door manufacturer's instructions for recommended installation guidelines.*

⚠ WARNING

To prevent possible SERIOUS INJURY from a moving chain:

- DISCONNECT electric power to the operator BEFORE manually operating your door.
- If possible, use emergency disconnect ONLY when door is CLOSED. Weak or broken springs or unbalanced door could result in an open door falling rapidly and/or unexpectedly.
- NEVER use emergency disconnect unless doorway is clear of persons and obstructions.

HARDWARE

A Flanged Hex Nut 3/8"-16 (2)

B Nylok Nut 3/8"-16 (1)

C Bolt 3/8"-16 x 1" (3)

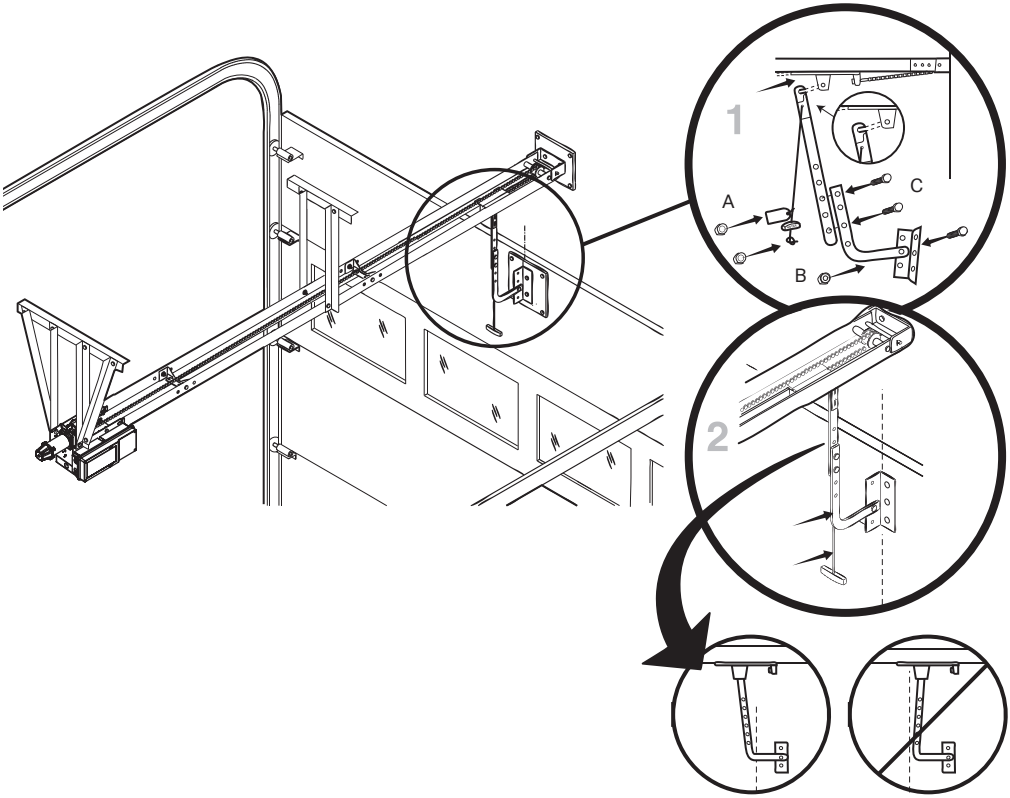

Jackshaft (JDC), Release (RJDC) and Hoist (JHDC) Operators

⚠ WARNING

To prevent possible SERIOUS INJURY, DEATH, or uncontrolled descent of the door:

- When installing a jackshaft-style operator on a sectional door, additional precautions MUST be taken to assure that proper door cable tension is present throughout the ENTIRE travel of the door.

Carton Inventory

Your door operator is packaged in one carton which contains the motor unit and items below. If anything is missing, carefully check the packing material.

Description

- Operator assembly
- Installation manual and warning placards
- Hardware box (includes chain keepers and fasteners)
- Floor level Wall Controller with LCD display
- LiftMaster Monitored Entrapment Protection, CPS-U Photoelectric Sensors
- Manual release (disconnect) sash chain (RJDC models only)
- Hoist hand chain (JHDC models only)
- Engagement/Disengagement Ropes (JHDC models only)
- Door/operator drive chain
- Brake release sash chain, plus 12ft extension kit (JHDC 2200 models only)

JDC7 operators include (2) 4.5 AH batteries and battery mounting tray. (If battery backup is required for other models, order accessory kit DC7AH).

NOTE: *The new DC logic board includes inputs for CTM (Cable Tension Monitor). Although, not required to operate the unit, it is highly recommended to include Cable Tension Monitors (part #s: K41-0157-000 and K41-0156-000) on standard, vertical and high lift installations. The Cable Tension Monitor detects cable slack and will stop and reverse the door.*

NOTE: *Pusher springs should be used with the door system to help get the door moving in the Close direction. For certain types of doors, such as standard lift, angled track may also be recommended. Please check with the door manufacturer for details.*

Door Sprockets

Door sprocket kits (including keyway and setscrew) are sold and shipped separately from operator. Reference the tables in the "Door Sprockets (JDC/RJDC/JHDC Only)" section to determine appropriate sprocket tooth count for your application.

Manual Release (RJDC) Handing Switch (If Required)

Disconnect Handing Re-Orientation

TOOLS REQUIRED:

Socket 9/16, Socket 5/16, Phillips screwdriver

STEPS:

1. Take off and set aside the plastic cover that houses the manual release assembly by removing 4 securing screws.
2. Open the operator's plastic e-box cover and disconnect the switch harness.
3. Using 5/16" socket or Phillips screwdriver remove two screws holding hinge bracket, then slide the assembly out (screws and subassembly needed in step 9).
4. Remove screws shown in image below (only 2 depending on release orientation).
5. Unplug the encoder and motor harness. Move harnesses to prevent cable pinching.
6. Remove the eight bolts holding the gearbox to the chassis with 9/16" socket.
7. Remove gearbox from assembly and turn 180 degrees.
8. Re-assemble gearbox to chassis and secure with eight bolts. Leave the 4 screws on the desired release side loosely installed.
9. Re-install release subassembly to chassis on desired side of operator (see image for reference).
10. Tighten all bolts for gearbox (reference torque 55-60 in-lbs).
11. Attach and secure plastic cover with four screws. Ensure wire rope exits the plastic cover through the cover slot.
12. Connect encoder and motor harness as shown.

NOTE: *In Firmware 1.0 and newer, during commissioning on LCD wall control, select "REVERSE" option in the "MOUNT TYPE" step to ensure proper motor rotation. If unit is already commissioned, reset to factory settings to see this option.*

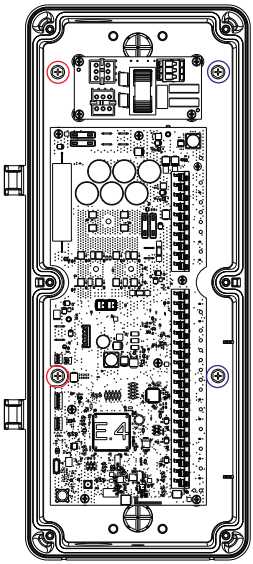

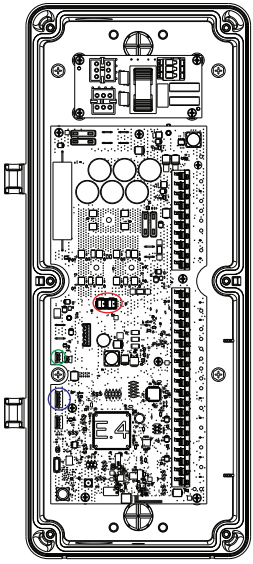

Jackshaft (JDC), Release (RJDC) and Hoist (JHDC) Assembly

Configure the Operator

1. Place the 10 or 12-tooth drive sprocket on the operator shaft, choosing the appropriate side for your installation. Position sprocket as close to the operator frame as the installation will allow, then secure with included set screws.
   - MAXUM JDC/JHDC operators are dual-handed; the drive sprocket can be used on either the right or left-side for installation.
2. If switching handing, the hoist assembly can also be switched.

   NOTE: *The hoist will need to change location depending on the wall mount or front of hood application shown in the images below.*

   - To reposition the hoist:
     a. Remove the four allen bolts.
     b. Pull the housing down and away from the motor, then rotate the housing 180 degrees.
     c. Place the housing back up to the motor and tighten back in place using the allen bolts.

WARNING

To prevent possible SERIOUS INJURY or DEATH:

- DO NOT connect electric power until instructed to do so.
- If the door lock needs to remain functional, install an interlock switch.
- ALWAYS call an Authorized Service Technician if door binds,sticks or is out of balance. An unbalanced door may NOT reverse when required.
- NEVER try to loosen, move or adjust doors, door springs,cable, pulleys, brackets or their hardware, ALL of which are under EXTREME tension and can cause SERIOUS PERSONAL INJURY.
- Disable ALL locks and remove ALL ropes connected to door BEFORE installing and operating door operator to avoid entanglement.
- Fasten the operator SECURELY to structural supports of the building.
- Concrete anchors MUST be used if installing ANY brackets.

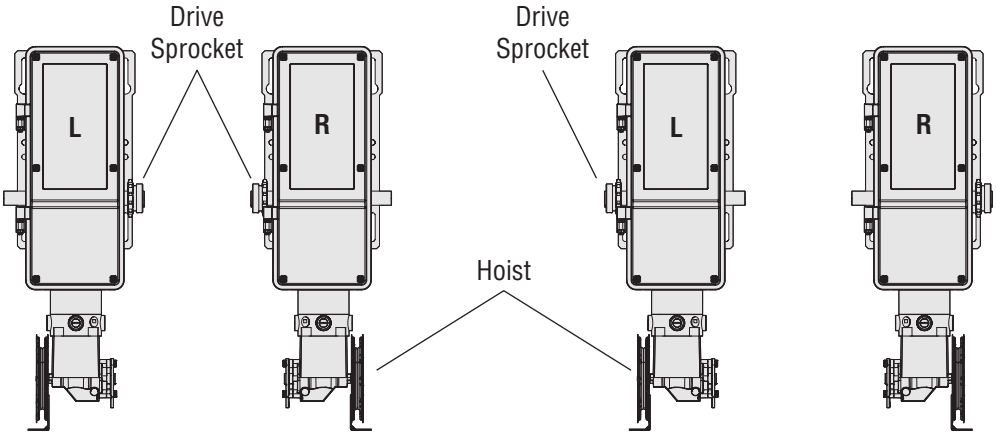

Wall Mount **Front of Hood Mount**

Battery Backup Installation (If Applicable)

NOTE: *JDC7 operators include (2) 4.5 AH batteries and mounting tray. (If battery backup is required for other models, order accessory kit DC7AH)*

NOTE: *It's recommended to install battery backup unit at ground level, prior to mounting operator on fixed location.*

1. Remove the battery cover from the battery enclosure (see image 1).
2. Ensure jumper and battery harness are properly routed and connected (see images 2 and 3).
3. Using supplied screws, reinstall and secure battery box cover and ensure screws are tightened firmly (see image 1).
4. Using supplied screws, mount battery enclosure to operator (OR) in an appropriate alternate location and ensure screws are tightened firmly. (Reference the Recommended mounting location.)
5. Route wires around backside of battery enclosure, through knock out and into electrical box. (Reference the Knock out location.) Do NOT connect the wires to the logic board at this time.
6. Place snap in cord gland over top of wires and snap into place.

   Recommended mounting location:

   - JHDC/JDC: Side of operator; opposite from drive shaft and sprocket location.
   - TDC: Mount to the bottom of the operator. Open electrical box and knock out appropriate backside ½ conduit location.

   Knock out location:

   - JHDC/JDC: Bottom of the electrical box, adjacent to the EMI filter board.
   - TDC: Bottom of the electrical box, adjacent to the antenna AUX connection.

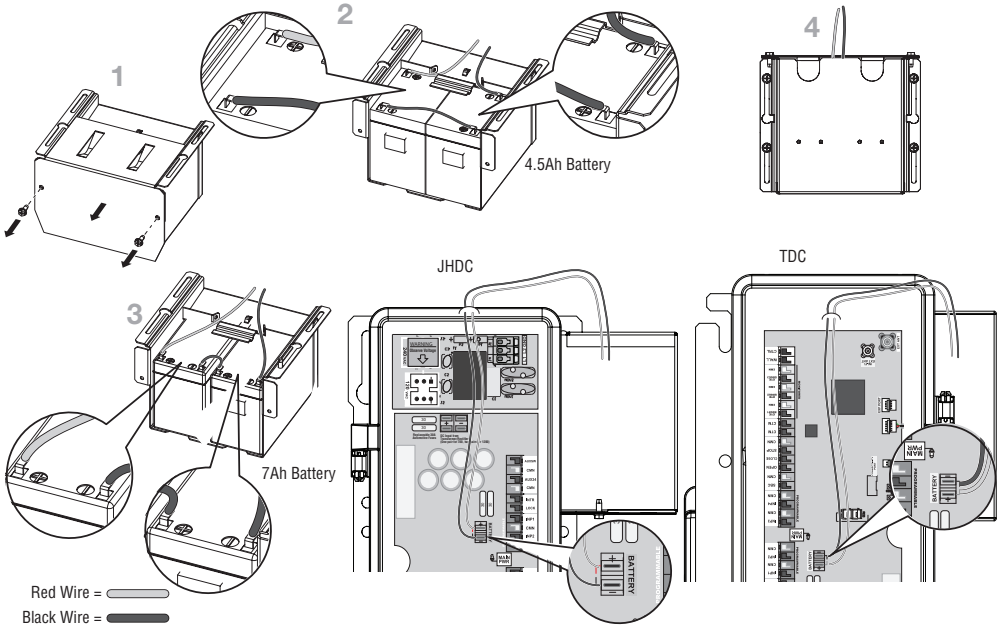

NOTE: Do NOT connect the battery connectors to the printed logic board terminals at this time. You will be later instructed when to electrically connect the battery pack.

Installation for RJDC, JDC and JHDC

Determine Mounting Location

1. The operator may be mounted on the wall, shelf, or bracket (not provided, see "Accessories" section. The optimum distance between the door shaft and operator drive shaft is 12-15 inches (30.5-38 cm).

In the image, 1a shows the wall mount, and 1b shows the shelf or bracket mount.

⚠ WARNING

TO REDUCE THE RISK OF SEVERE INJURY:

- Install the operator, a minimum of 8 feet (2.44m) from the floor.

NOTE: If the operator sprocket is below the minimum 8 foot height requirement, please install appropriate Chain Guard Kit for your 2" output shaft (CHNGUARD) or 3" output shaft (CHAINGUARD3IN). Chain Guard Kits are sold separately.

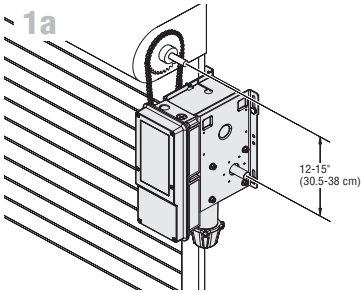

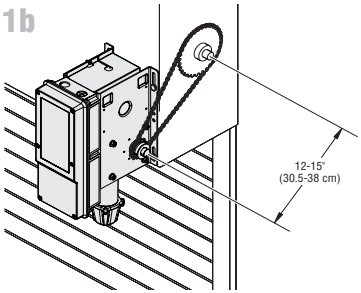

Mount the Operator

The wall or mounting surface MUST provide adequate support for the operator. The surface must:

- Be rigid to prevent play between the operator and the door shaft.
- Provide a level base.
- Permit the operator to be fastened securely and with the drive shaft parallel to the door shaft.

1. Place the door sprocket on the door shaft so it can be moved to align vertically with the operator drive shaft.
2. Insert the keys and fasten the sprockets with the set screws (recommended torque is 34-45 in-lb).
3. Hold the operator in the desired mounting position so door sprocket and drive sprocket are vertically aligned.
4. Mount the operator to the wall or mounting plate where the operator can be moved to aligned with the appropriate hardware (not supplied).
5. Wrap the drive chain around the door sprocket and the drive sprocket, then secure with the master link.

   NOTE: *Chain links may need to be removed to achieve appropriate chain length.*

   NOTE: *It is highly recommended to add a thread adhesive to secure the set screws in place.*

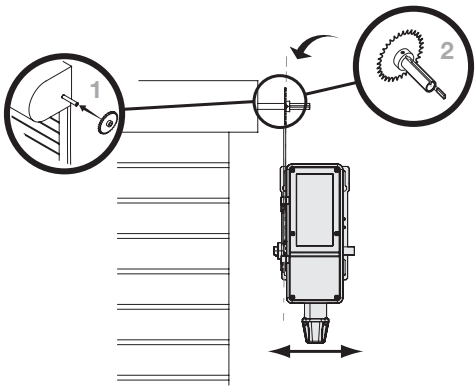

Installation for RJDC, JDC and JHDC (continued)

Installing the Release Chain (RJDC Only)

1. Locate the Release Chain (sash chain) assembly package with S-hook.
2. Loop either end of the S-hook onto the open end of the large spring as shown in Figure 1.
3. Use pliers or other crimping tool to close and secure the S-hook end around the Spring loop (Figure 2).
4. With the sash chain still in the plastic bag, attach the loose end to the S-hook (Figure 2).
5. Remove the remaining sash chain from the plastic bag and allow to hang freely to the floor.
6. Cut the sash chain to the desired length.

Figure 1

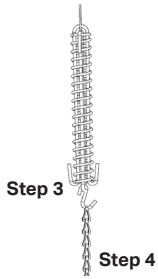

Figure 2

Figure 2 Continued

Secure the Chain Hoist (JHDC) or Release Chain (RJDC)

1. Fasten the Retaining Bracket 4 ft (1.2m) above the floor. For RJDC models with manual release sash chain, route the sash chain through the eyelet of the Retaining Bracket.

   NOTE: *If the position of the operator causes the hand chain to hang in the door opening, hook the chain to the side near the top of the door jamb.*

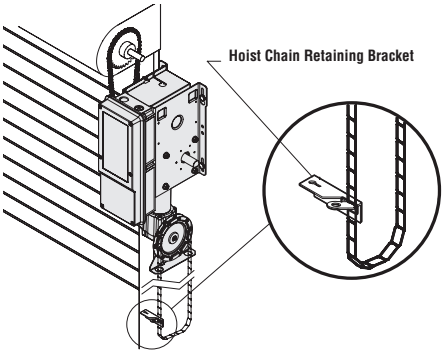

Manual Release

Emergency Disconnect - (TDC) Trolley)

TO DISCONNECT DOOR FROM OPERATOR

The door should be in the fully closed position if possible.

1. Pull emergency release handle straight down. Emergency disconnect will open.

TO RECONNECT DOOR ARM TO TROLLEY

2. Lift free end of door arm to trolley. Pull emergency release handle to allow arm to engage roll pin. Release handle. Emergency disconnect will close.

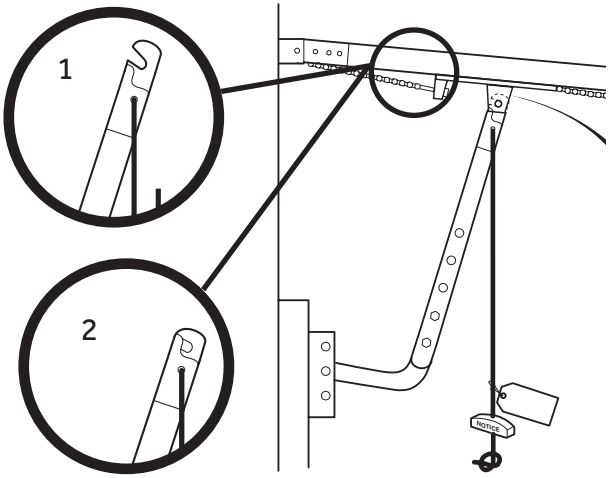

WARNING

To prevent possible SERIOUS INJURY or DEATH from a falling door or arm:

- DISCONNECT electric power to the operator BEFORE manually operating your door.
- DO NOT stand under the door arm when pulling the emergency release.
- If possible, use emergency disconnect ONLY when door is CLOSED. Weak or broken springs or unbalanced door could result in an open door falling rapidly and/or unexpectedly.
- DO NOT pull the disconnect/ release sash chain while door is in motion.
- DO NOT engage or disengage hoist mechanism while door is in motion.
- NEVER use emergency release handle unless doorway is clear of persons and obstructions.

Emergency Disconnect - RJDC (Manual Release) and JHDC (Hoist)

These operators have provisions for manually operating the door in case of emergency or power failure. These operators are equipped with a manual hoist. An electrical interlock will disable the electrical controls when the hoist is used.

MANUAL OPERATION (AND BRAKE, 2200 ONLY))

1. To disengage and electrically disable the operator controls, pull down and secure the sash chain to wall bracket (RJDC) or pull the red disengage rope (JHDC). NOTE: F96 INTERLOCK will be displayed on LCD Wall Control.
   (2200 Models Only) Disengage brake by pulling the sash chain and securing to wall bracket.
2. For JHDC models only, manually move the door in the desired direction by pulling on one side or the other of the continuous hoist chain loop. For RJDC models only, the door is now physically released from the operator shaft, and can be moved freely by hand.
3. To re-engage and enable electronic operator control, release the sash chain from wall bracket (RJDC) or pull the green rope (JHDC). NOTE: F96 INTERLOCK will no longer be displayed on LCD Wall Control.

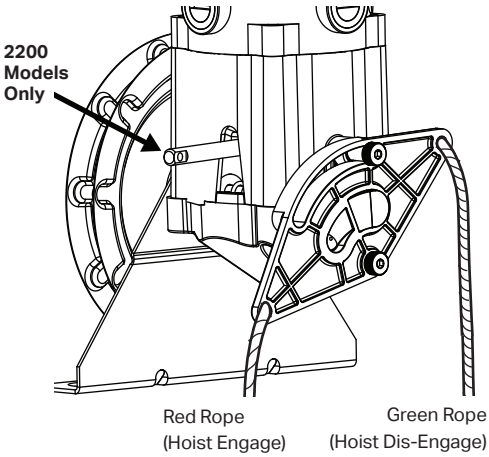

(2200 Models Only) Engage brake by releasing sash chain from wall bracket.

Wiring

⚠ WARNING

To prevent possible SERIOUS INJURY or DEATH:

- ANY maintenance to the operator or in the area near the operator MUST NOT be performed until disconnecting the electrical power and locking-out the power. Upon completion of maintenance the area MUST be cleared and secured, at that time the unit may be returned to service.
- Disconnect power at the fuse box BEFORE proceeding. Operator MUST be properly grounded and connected in accordance with national and local electrical codes. The operator should be on a separate fused line of adequate capacity. DO NOT apply power to the operator until instructed to do so.
- ALL electrical connections MUST be made by a qualified individual.
- DO NOT install ANY wiring or attempt to run the operator without consulting the wiring diagram.
- ALL power wiring should be on a dedicated circuit and well protected. The location of the power disconnect should be visible and clearly labeled.
- ALL power and control wiring MUST be run in separate conduit.

Power and Ground

Power and control wiring must be run in separate conduit to comply with national and local electrical codes. For power wiring, use the appropriate wire gauge. Use conduit knockouts and appropriate conduit fittings for wiring as indicated on the electrical box label.

NOTE: *Use caution when removing knockouts to avoid damaging the internal components.*

Image A

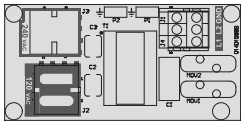

Image B

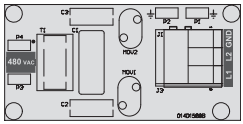

1. Open the electrical box cover.
2. Run power wires to electrical box according to national and local electrical codes.
3. Attach power and ground wires to appropriate terminals. Incoming power leads go to L1 and L2. Connect Ground wire to GND.

   NOTE: The operator must be properly grounded. *Failure to properly ground the operator could result in electric shock and serious injury.*

   NOTE: *For **THREE PHASE POWER,** only connect two of the incoming power legs to L1 and L2. Cap off the third leg. Connect Ground to GND.*

4. Ensure the power disconnect at the panel box is acceptable to be used as the main disconnect for a single pole, two pole or a three pole application as applicable. It needs to disengage ALL power legs at the same time.
5. Ensure proper balancing of the multi-phase multi-wire configuration. The electrician will be responsible to ensure proper balancing of loads.

* Maximum wire gauge that can be connected to the operator's terminal is 12 AWG. When a larger wire gauge is required, the wire must be gauged down to 12 AWG. USE COPPER WIRE ONLY.

Voltage Selection

NOTE: *LiftMaster offers two types of EMI filter boards. However, each operator will ONLY house a single type of board, dependent on operator voltage specification ordered. Reference Image A for 120/ 240Vac and Image B for 480Vac*

1. Locate EMI filter board inside of the electrical box.
2. Remove the orange voltage sticker covering the voltage connector/s and stick it to the inside of the electrical box.
3. On units with type A EMI filter boards (see Image A), verify incoming voltage and phase type.
4. Plug the connector to the appropriate plugin labeled 120Vac OR 240Vac.

Applying AC Power

DO NOT apply power to the operator until instructed to do so. The Wall Control and Entrapment Protection Devices (if not C2 constant pressure to close) MUST be installed prior to applying power to the operator.

NOTE: *If using an electric driver to secure screws, set clutch to lowest setting.*

Wall Controller Installation

⚠ WARNING

To prevent possible SERIOUS INJURY or DEATH from electrocution:

- Be sure power is NOT connected BEFORE installing the door control.

To prevent possible SERIOUS INJURY or DEATH from a closing door:

- Install the door control within sight of the door, out of reach of small children, at a minimum height of 5 feet (1.5 m) above landings, steps, or any other adjacent walking surface, and away from ALL moving parts of the door.
- Install the control station far enough from the door to prevent the user from coming in contact with the door while operating the controls.
- Install the entrapment warning placard on the wall next to the control station in a prominent location visible from the door.
- NEVER permit children to operate or play with door control push buttons or remote controls.
- Activate a door ONLY when it can be seen clearly, is properly adjusted and no obstructions exists in the path the door will travel.
- ALWAYS keep the door in sight until completely closed. NEVER permit anyone to cross path of a closing door.

NOTE: *The field wiring terminals are rated for 14-24 AWG wire Stranded and 12-24 AWG Solid (300ft of 24AWG twisted pair wire is the recommended run / distance of wire).*

NOTE: *Maxum only supports connecting a single LCD Wall Control (DCWALLCTL). However, it is possible to connect additional single, 2- or 3-Button Wall Controllers, depending on application needs. See "Accessories" section for other wall control options if multiple wall controls are required.*

1. Remove wall control cover from mounting bracket by loosening the four Philips screws at each corner of the housing.
2. Using appropriate mounting hardware (not supplied), fasten the mounting bracket to the wall near the operator and at least 5 feet (1.5m) above floors, landings, steps, or any other adjacent walking surface.
3. Select the appropriate knockout and run the wires to the operator (in accordance with national and local electrical codes).
4. Connect wires to the wall controller (wall controller wires are NOT polarity sensitive) and reinstall the wall controller cover.
5. Fasten the entrapment warning placard next to the wall control.

Headless Mode

Once commissioned / configured the system is allowed to move if Digital Wall Control is undetected / missing from the WALL / CTRL ports on the main board. If Wall Control is reconnected at any point the system will require a power cycle in order to reinitialize the communication between the Wall Control and operator.

Feature functionality:

- System will run at HALF speed when Digital Wall Control is undetected or missing
- System will run at FULL speed when a jumper is placed between WALL/ CTRL ports on main board

4

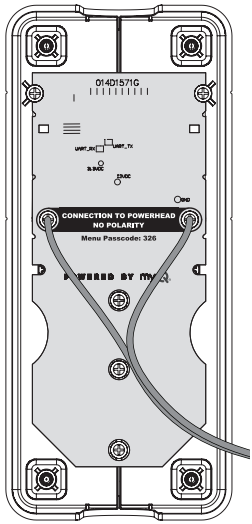

Entrapment Protection

Monitored Entrapment Protection

IMPORTANT INFORMATION ABOUT THE MONITORED ENTRAPMENT PROTECTION DEVICES

Eyes/ Edge inputs will not be functional until the system is commissioned / programmed. LED on Eyes/ Edge will be off until fully commissioned/ programmed.

A monitored entrapment protection device is required for most operation modes (see "Monitored Eyes/Edge Configuration" section). If a monitored entrapment protection device is not installed, constant pressure to close will be required from the wall controller.

See "Accessories" section for a complete list of monitored entrapment protection devices.

Three EYE/EDGE terminals are provided on the main board and color-coded in YELLOW for easy identification. There should be only ONE set of photo eyes or ONE edge sensor or ONE light curtain connected per terminal.

When installing a set of photo eyes, twist both White wires together and insert into a COM terminal. Twist both White/Black stripe wires together and insert into the EYE/EDGE terminal of that same MONITORED SET of terminals.

NOTE: *Any supported Entrapment Protection Device can be wired into any of the three unoccupied EYE/EDGE terminals. Supported devices are listed in the Accessories Pages.*

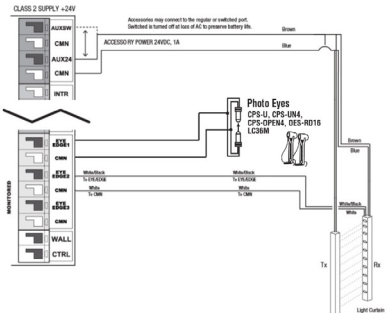

WARNING

To prevent possible SERIOUS INJURY or DEATH from a closing door:

- Be sure power is NOT connected to the door operator BEFORE installing the pair of photoelectric sensor(s).
- The door MUST be in the fully opened or closed position BEFORE installing the LiftMaster Monitored Entrapment Protection Device(s).

To prevent SERIOUS INJURY, DEATH, ENTRAPMENT, or PROPERTY DAMAGE:

- Correctly connect and align the photoelectric sensor.
- Install the primary monitored photoelectric sensor beam NO HIGHER than 6" (15 cm) above the floor.
- This is a required LMEP Device for B2, TS, T, and FSTS wiring types and MUST NOT be disabled. For D1, C2, and E2 wiring the installation of an entrapment protection device is recommended.
- LiftMaster Monitored Entrapment Protection Devices are for use with LiftMaster Commercial Door Operators ONLY. Use with ANY other product voids the warranty.
- If an edge sensor is being used on a horizontal slide door,place one or more edge sensors on both the leading and trailing edge.
- If an edge sensor is being used on a vertical moving door,place edge sensors on the bottom edge of the door.
- NEVER try to loosen or remove an obstruction that has impeded the movement of the door. Both the obstruction and door are under EXTREME tension and loosening or removing an obstacle, impeding the movement of the door, can cause SERIOUS PERSONAL INJURY.
- NEVER stand under a door that has been impeded by an obstruction. KEEP CLEAR. Door could move freely at any time and can cause SERIOUS PERSONAL INJURY.
- If the door should be obstructed or impeded in its movement, ALWAYS call an Authorized Trained Service Technician to clear that obstruction.

NOTE: *A set of photoelectric sensors (photo eyes) are included and must be installed, except for constant pressure to close. Depending on your installation and usage needs, please consult with your installation specialist to see if the addition of a contact edge sensor on the leading edge of the door, a cable tension monitor and/or a light curtain is also required.*

Typical Entrapment Protection Device(s) Overview

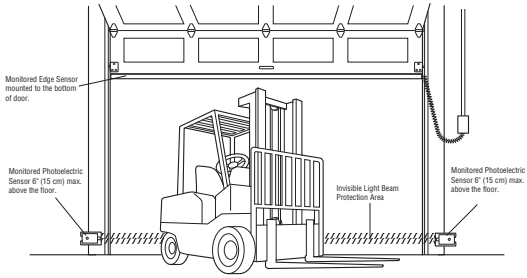

Entrapment Protection (continued)

Install the Monitored Light Curtain (Optional)

This step includes directions to install one set of monitored light curtains as a standalone primary entrapment protection device.

The mounting brackets must be securely fastened to a solid surface such as a wall framing. If installing the mounting brackets in masonry construction, add a piece of wood at each location to avoid drilling extra holes in the masonry.

NOTE: *If the Monitored Light Curtain is installed with coil cord, the coil cord needs to be secured so it will not interrupt the light beams.*

1. Fasten the mounting brackets loosely to both Monitored Light Curtain with the screws provided.
2. Measure a maximum of 6 inches above the floor. Mark this location. The lowest optical sensor of the Monitored Light Curtain must be installed at or below this point. In this application, in order to assure that the lowest optical sensor is mounted no higher than 6" above the ground, the light curtain wires must be oriented at the top of the light curtain in this application.
3. Hold the Monitored Light Curtain up to the desired mounting location with the cable end pointing upward. Secure the bottom mounting bracket to the mounting surface.
4. Make sure the Monitored Light Curtain is level and secure the upper mounting bracket to the mounting surface.
5. Tighten the screws to secure the Monitored Light Curtain to the mounting bracket.
6. Secure the other Monitored Light Curtain to the opposite side of the door following steps 2–5, making sure they are aligned.
7. Run wires to the operator.
8. Twist like colored wires together, brown to brown and blue to blue.

NOTE: *For direction configuration please reference "MONITORED EYES/ EDGE CONFIGURATION" section*

WARNING

To prevent possible product damage and incorrect operation:

- NEVER scratch or paint the optical sensors.
- DO NOT drill ANY additional holes into the Monitored Light Curtain.
- Correctly connect and align the Monitored Light Curtain transmitter and receiver.
- DO NOT bend or twist the Monitored Light Curtain.
- Oil may damage the Monitored Light Curtain cable so contamination MUST be avoided at ALL times.
- DO NOT mount the Monitored Light Curtain where sunlight or other external infrared light sources will shine directly into the optical sensors of the Monitored Light Curtain receiver. If necessary, switch the mounting side of the Monitored Light Curtain transmitter and receiver.

POWER WIRING

Do not run wiring in the same conduit with AC power.

1. Disconnect power to the operator.
2. Connect the wires from the Monitored Light Curtain LC36M to the following.
   a. Brown wire to + Aux24 power
   b. Blue wired to – Aux24 CMN
   c. White wire to eye/edge input –
   d. Black wired to eye/edge input +

ALIGNMENT

The Monitored Light Curtain transmitter and receiver must be aligned. When properly wired and aligned the amber and green LEDs will be ON. The amber LED is located on the Monitored Light Curtain Transmitter and the green LED is located on the Monitored Light Curtain Receiver. If the amber and green LEDs are not on, see the table below.

1. Open and close the door for one complete cycle to let the operator register the Monitored Light Curtain.

Amber LED	Green LED	Status	Solution
OFF	OFF	No power	Check wiring.
ON	Blinks	• Monitored Light Curtain receiver and transmitter are not aligned • Obstructed light beam • Defective Monitored Light Curtain Receiver	• Adjust the Monitored Light Curtains to correct alignment • Remove the obstruction • Replace Monitored Light Curtain receiver and transmitter (Model LC36M)

NOTE: *For more detailed information, please refer to Monitored Light Curtain manual 114-5541.*

Cable Tension Monitors

Install the Cable Tension Monitor(s) (Optional)

TWO CABLE TENSION MONITORS MAY BE CONNECTED TO THIS OPERATOR.

THE CABLE TENSION MONITORS DETECT ANY SLACK THAT MAY OCCUR IN THE CABLES AND WILL RESPOND ACCORDINGLY.

NOTE: *ONLY USE THE LIFTMASTER CABLE TENSION MONITORS, AS THEY HAVE BEEN TESTED AND APPROVED FOR THIS SYSTEM. See "Accessories" section.*

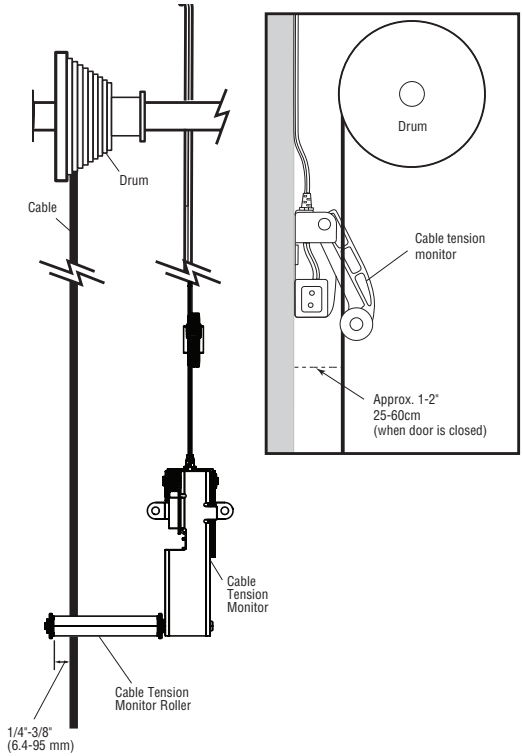

1. Make sure the door cable is approximately 1"-2" (25-50 mm) from the mounting surface. Door adjustments or shimming may be required to achieve proper depth for the door cable. The bracket must be flush with the mounting surface.

2. Position the cable tension monitor as close to the drum as possible. The optimal distance of the cable from the wall surface is no more than 2.5" (6.35 cm), and be sure the roller extends 1/8"-1/4" past the cable. Make sure the cable tension monitor and roller is free from any obstructions in all positions of operation.

   NOTE: *There must be no obstructions in the installation area that prevent the cable tension monitor from closing completely when slack is detected.*

   NOTE: *Cable tension monitors must either be anchored to concrete, or a wood stud with appropriate fasteners. If neither are available, toggle bolt style drywall anchors with at least a 50 lbs rating are acceptable.*

3. Run bell wire to the door operator junction box, and down to the control box through conduit as shown on the right.

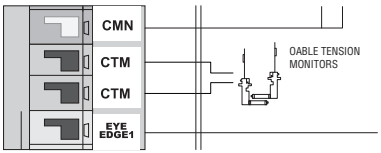

4. Once the controller is installed, connect the bell wires parallel to the CTM and CMN terminals on the terminals on the controller (polarity is not important). See "Wall Controller Installation" section for installation information. Once installed, follow these steps to connect the wiring.

5. Connect the bell wires in parallel to the CTM and CMN terminals on the controller (polarity is not important). To simplify installation, the cable tension monitors can be wired together in the operator junction box, with only one pair of bell wires running down to the controller.

6. Repeat steps 1-5 for the opposite side of the door. Both cable tension monitors must be installed for proper operation.

   NOTE: *Cable must have tension through entire door travel. Make sure there is no slack in cable on opposite side of door during normal operation. If slack occurs during door travel, adjust cables as required.*

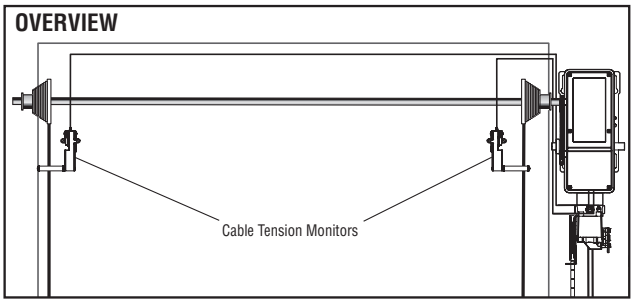

Wiring Diagram

WARNING

To prevent possible SERIOUS INJURY or DEATH:

- Disconnect electric power and/or battery BEFORE installing, performing ANY adjustments, or maintenance. Installation and ALL maintenance MUST be performed by a trained door systems technician.

For continued protection against fire:

- Replace ONLY with fuse of same type and rating.

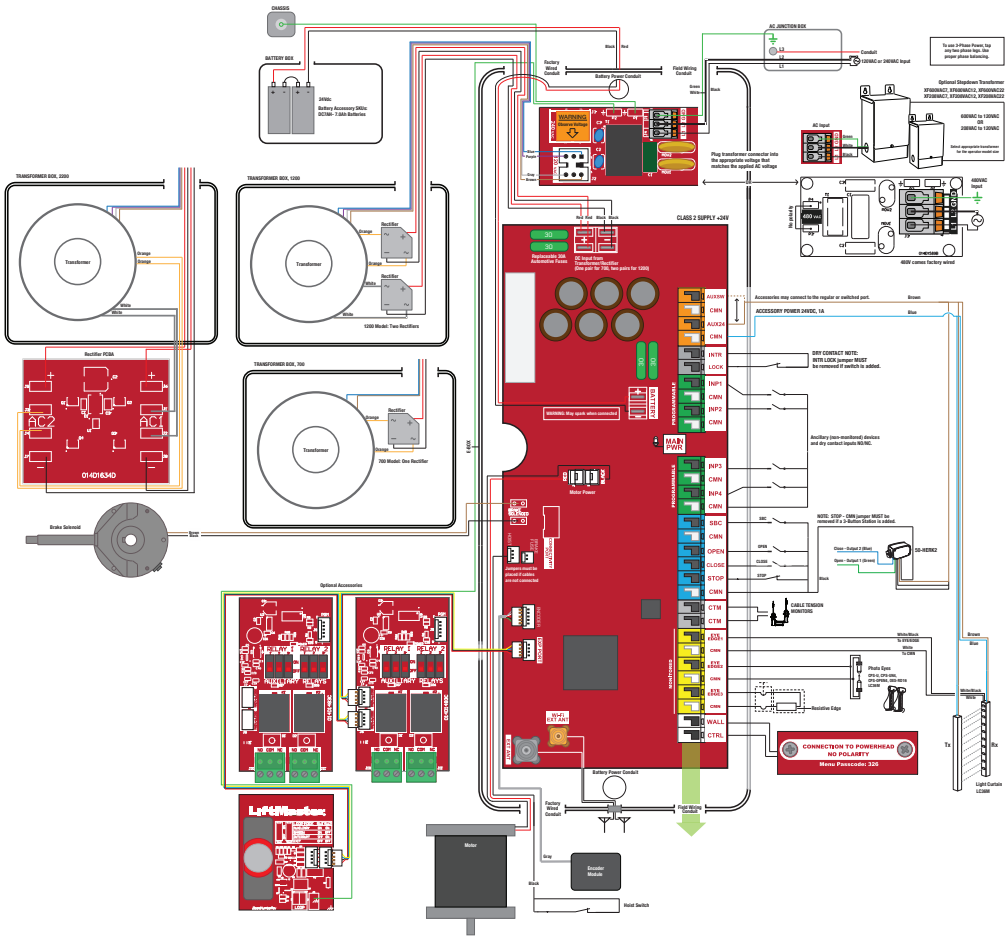

Wiring Diagram (continued)

Factory Wiring (View 1)

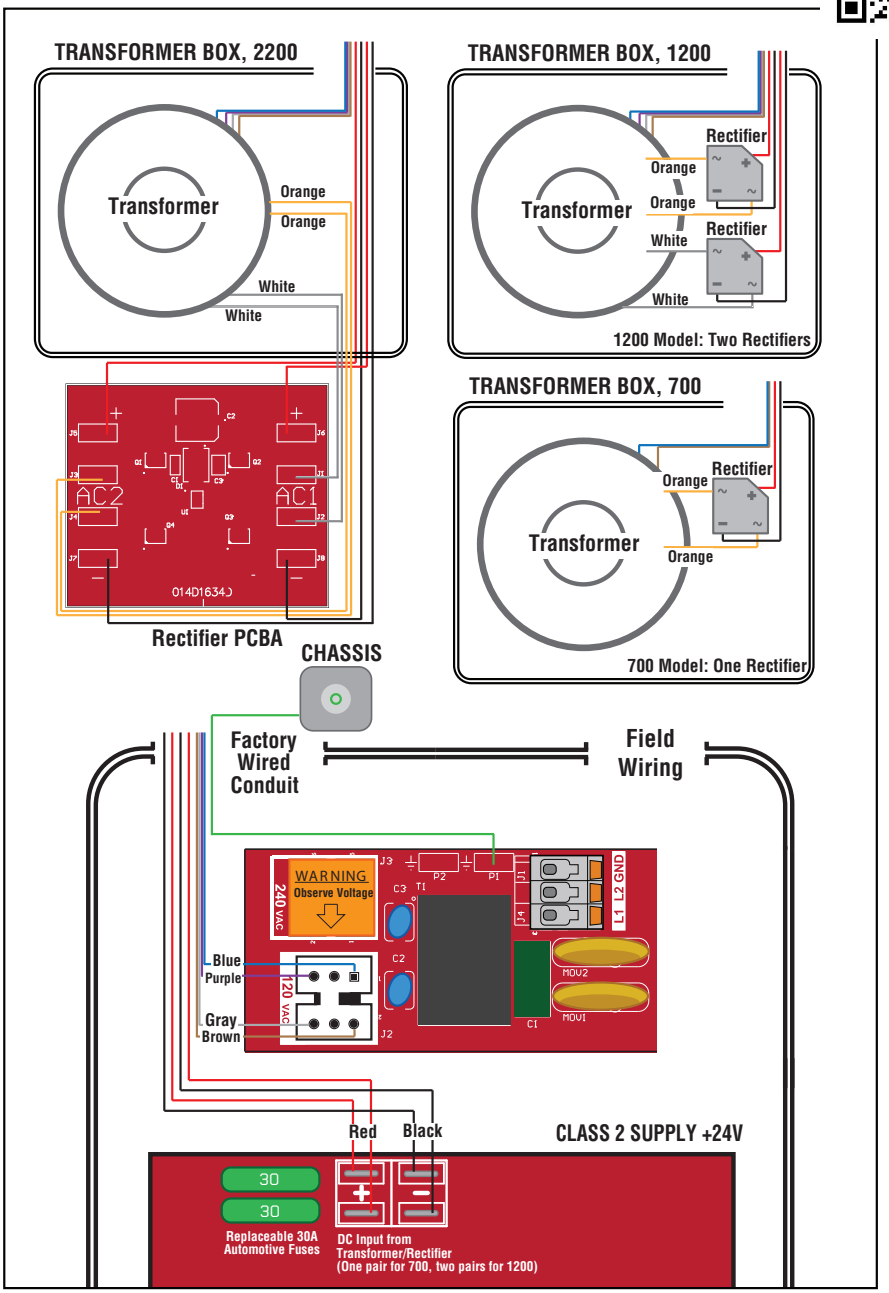

Wiring Diagram (continued)

Factory wiring (View 2)

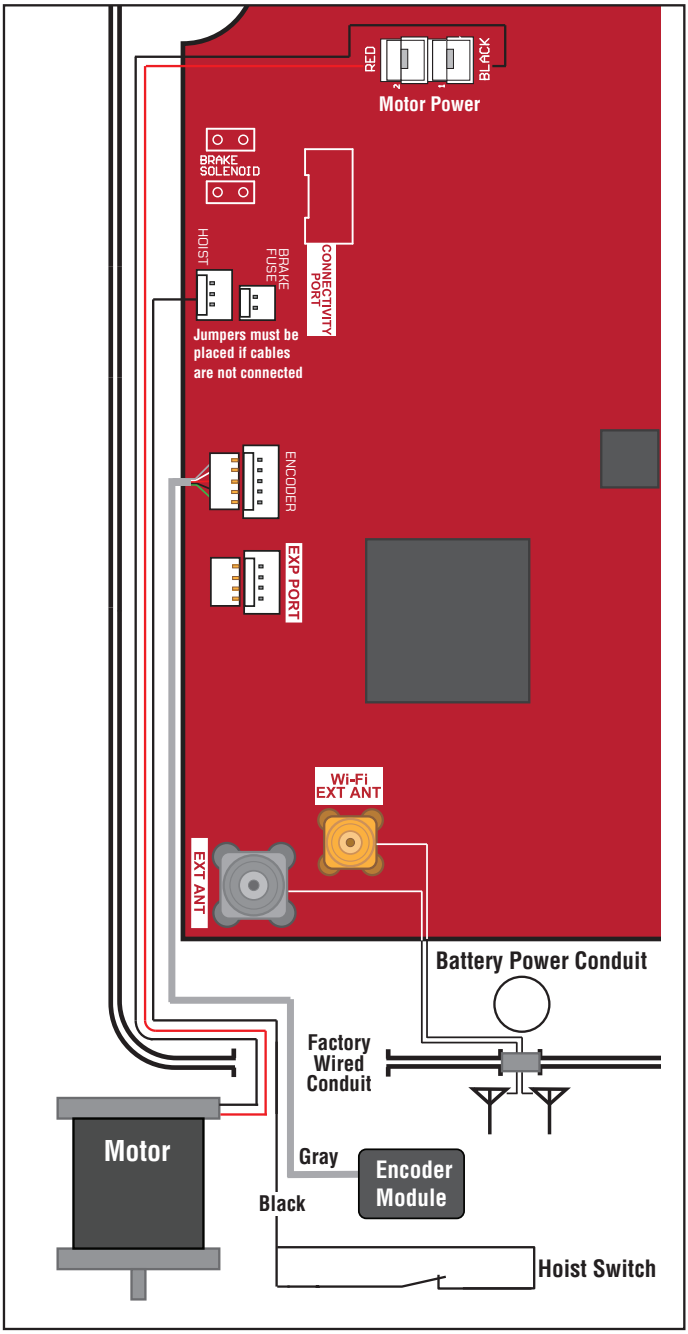

Wiring Diagram (continued)

Top Field Wiring

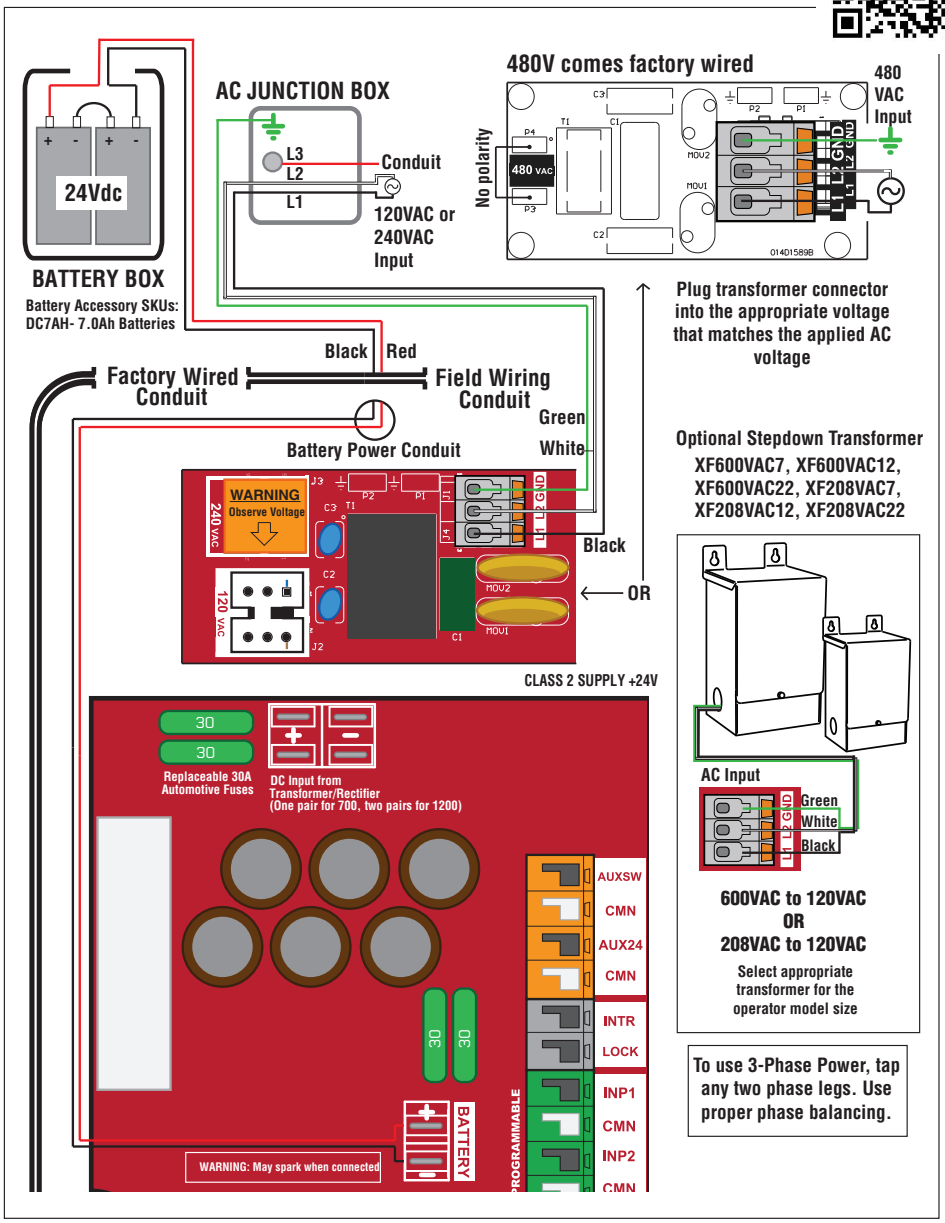

Wiring Diagram (continued)

Bottom Field Wiring (View 1)

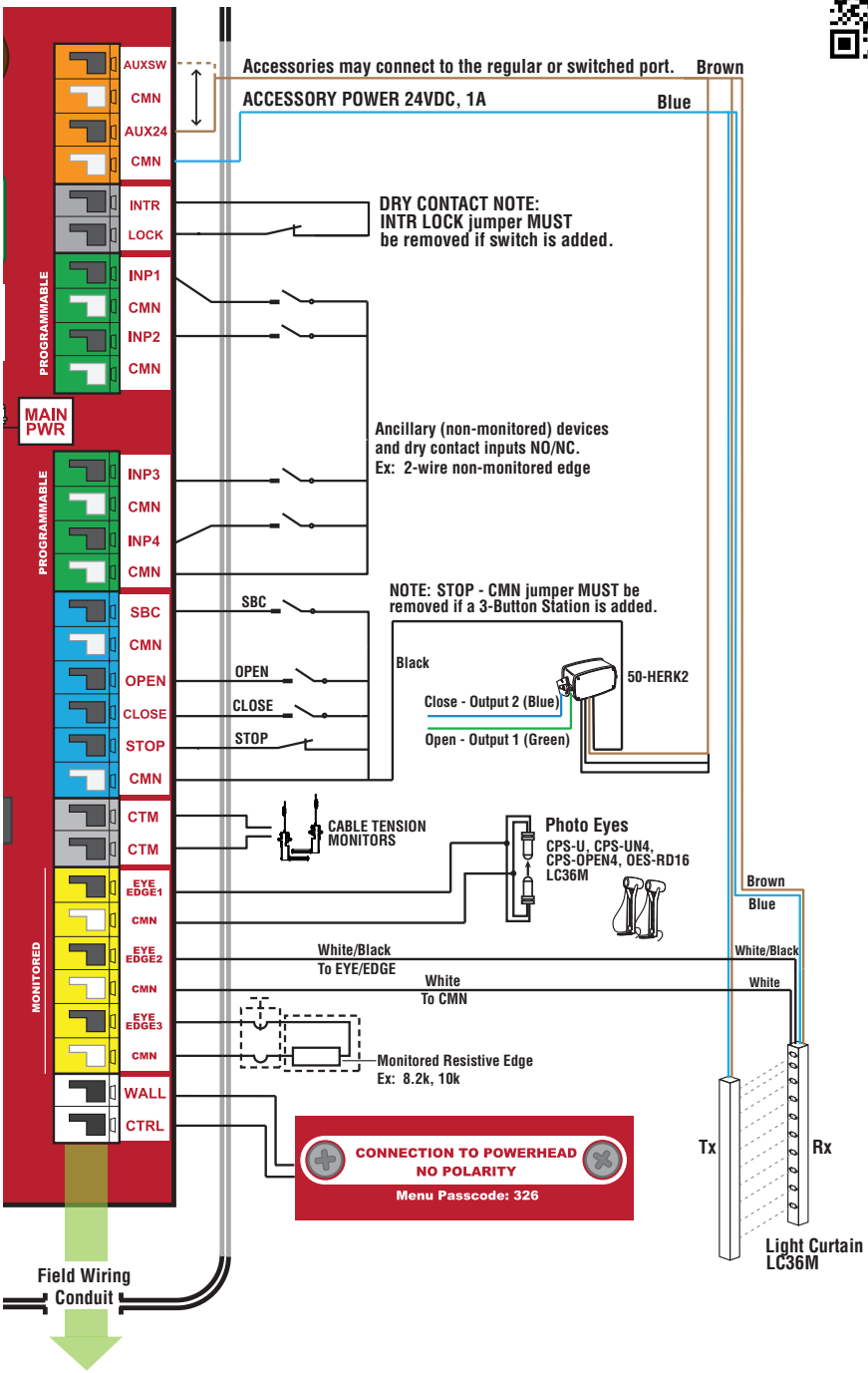

Wiring Diagram (continued)

Bottom Field Wiring (View 2)

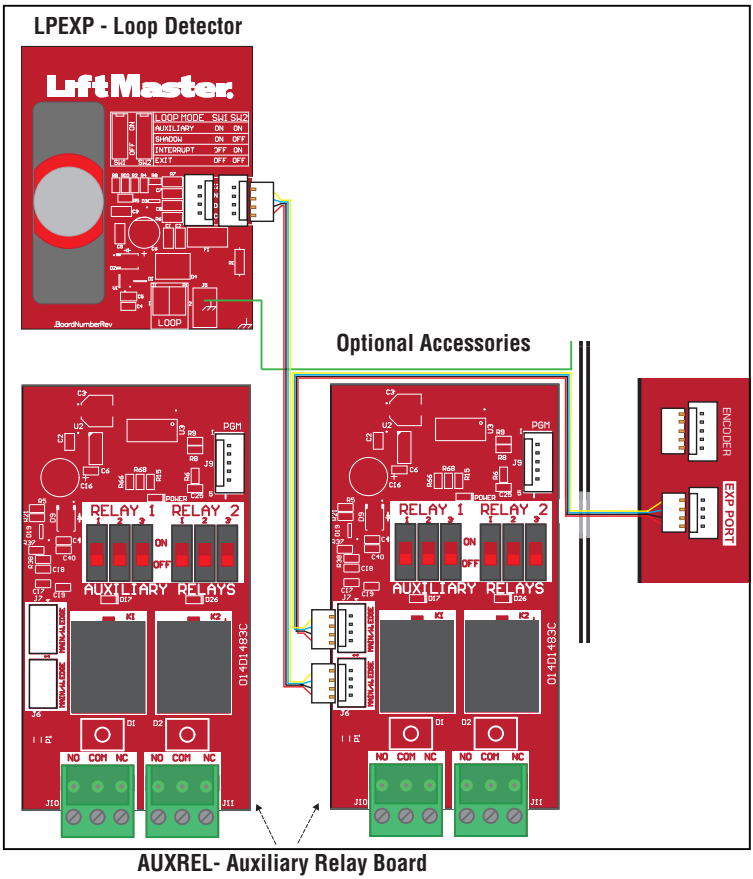

Mounting Location

Note: *AUXREL and LPEXP are independent of each other. Therefore, either can be installed independently or as a combination.*

Two AUXREL cards or a combination of a single AUXREL card and / or LPEXP cards can be mounted on the operator cover.

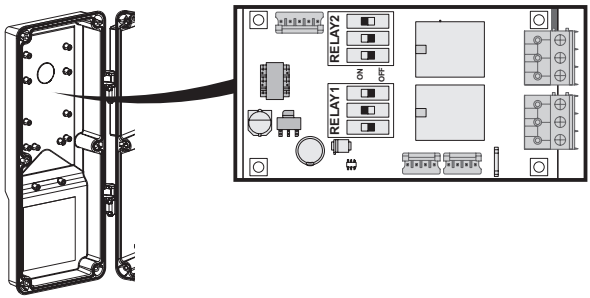

Programming

1. CONNECT the battery harness wires to the logic board connector, if battery backup was installed.
2. APPLY Power to the Operator. When power is applied to the operator, the LCD display will illuminate and step the user through Quick Start Commissioning.
3. During Commissioning, ENSURE door opening is cleared of ALL obstructions.

LCD Icons and States

Icon locations on display	
Connected to Wi-Fi	
Not connected to Wi-Fi	
1. Solid if connected to myQ server 2. Blinks if NOT connected to myQ server	
No battery	
Battery charging	
Battery fully charged	

NOTE: *On a "Service Board" the first prompt in Quick Start Commissioning will be SKU/ MODEL option.*

Quick Start Commissioning

Follow the below instructions to provision the TDC operator out-of-the-box or after factory reset:

Follow device menu prompt to set MOUNT TYPE (NORMAL or REVERSE).

NOTE: *Highlighted option "NORMAL"*

Follow device menu prompt to set OPEN LIMIT

Follow device menu prompt to set CLOSE LIMIT

Follow device menu prompt to LEARN WIFI

The operator will be in WiFi Learn Mode for 10 minutes if "YES" is selected.

NOTE: *Select "NORMAL" in the MOUNT TYPE menu when installing the operator in a standard configuration.*

Select "REVERSE" in the MOUNT TYPE menu when installing the operator in a reverse application.

⚠ WARNING

To prevent possible SERIOUS INJURY or DEATH:

- Disconnect electric power BEFORE performing ANY adjustments or maintenance.
- ALL maintenance MUST be performed by a trained door systems technician.
- Please wait several seconds for capacitors to discharge and for display to go out.

Quick Start Commissioning

Follow the below instructions to provision the JDC/JHDC operator out-of-the-box or after factory reset:

Quick Start Commissioning Menu

Follow device menu prompt to select DOOR HANGING

Follow device menu prompt to select DOOR DRUM

Follow device menu prompt to select DOOR SPROCKET (JDC/RJDC/JHDC ONLY)

Follow device menu prompt to set MOUNT TYPE (NORMAL or REVERSE).

NOTE: *Highlighted option "NORMAL"*

Follow device menu prompt to set OPEN LIMIT

Follow device menu prompt to set CLOSE LIMIT

Follow device menu prompt to LEARN WIFI

The operator will be in WiFi Learn Mode for 10 minutes if "YES" is selected.

Quick Exit of Menu

Simultaneously, press & hold the "UP" and red "Stop/Enter buttons for 3 seconds until the screen goes blank and it will exit you out of the menu you are in.

Quick Enter into the Menu

Simultaneously, press & hold the "Down" and red "Stop/Enter buttons for 3 seconds until the screen goes blank and it will take you to the main menu.

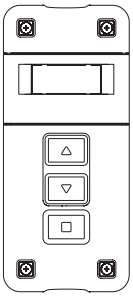

Programming (Testing)

After Quick Start Commissioning has been completed, ensure power is still applied to the operator when completing the Entrapment Protection Device testing.

Test all Entrapment Protection Devices

It is the responsibility of the specifier, purchaser, installer, and property owner to ensure that, on completion, the installation of the entrapment protection devices comply with all relevant federal, state, and local codes and regulations.

WARNING

To avoid SERIOUS personal INJURY or DEATH:

- Disconnect electric power BEFORE performing ANY adjustments or maintenance.
- ALL maintenance MUST be performed by an Authorized Service Technician.

1. Test the Monitored Light Curtain (if applicable)
   With the door in the full open position, press the close button.
2. While the door is closing, obstruct any of the light beams on the Monitored Light Curtain (the green LED on the Monitored Light Curtain Receiver will blink when the light beam is obstructed). The door should stop and reverse.

TEST THE PHOTOELECTRIC SENSORS (IF APPLICABLE)

Open the door.

1. Place an obstruction in the path of the photoelectric sensors. The LMEP LED will blink on the logic board.
2. Press and hold the CLOSE button. The door should not close.
3. Remove the obstruction.
4. Press and hold the CLOSE button. Door should close. If the LMEP is activated while closing, the door should reverse.

NOTE: *Operator will remain in C2 setting if photoelectric sensors CPS-RPEN4 and CPS-OPEN4 are not properly aligned.*

NOTE: *For CPS-OPEN4, if obstruction is present, code F42 (edge missing) will display.*

TEST THE EDGE SENSORS (IF APPLICABLE)

Open the door

1. Place an obstruction in the path of the door.
2. Press and release the CLOSE button. The door should stop and/or reverse.*
3. Remove the obstruction. Press and release the CLOSE button. The door should fully close.

NOTE*: LCD Wall Control may display F11 (DOWN FORCE) or F42/F45/F48 (EYE/EDGE MISSING).*

NOTE: *Some edge sensors will display F42 (EDGE MISSING) when blocked. This is as designed.*

Test Wall Controller Menu Access

Press OPEN button. (The door should move in the open direction.)

1. Press STOP button. (The door should stop.)
2. Press and hold the CLOSE button. (The door should move in the close direction.)
3. Release CLOSE button. Door should stop if in C2 or D1 mode. Door will reverse to full open position in E2 mode. The door should continue closing in all other modes.
4. Press STOP button. (The door should stop.)

Test Limit Adjustment

Press OPEN button. (The door should open.)

1. Allow the door to fully open.
2. Press and hold the CLOSE button. (The door should close.)
3. Allow the door to fully close.
4. If the limits are not set properly, remove power and adjust limits (see "Set Limits" section).

NOTE: *Door travel should stop when the OPEN or CLOSE limits are reached. If door drifting is occurring, spring tension on the door.*

Manual Commissioning Program Flow

IMPORTANT: *All entrapment protection devices will be disabled during the manual commissioning steps.*

All menu options under "System Settings" are passcode protected

CONNECTIVITY → **LEARN** - **RX REQUENCY**

Additional Programming

ENTER PROGRAMMING

Simultaneously, press & hold the "Stop/Enter" and "Down" buttons for 3+ seconds to enter the operator menu.

1. Scroll down to “SYSTEMS SETTINGS” with the “UP” and “DOWN” buttons and press"Stop/Enter." You will be prompted to enter the passcode for the operator.
2. Enter 326 as the passcode.

DOOR SETTINGS → **SELECT DOOR TYPE** STANDARD LIFT → **SELECT DOOR TYPE** HIGH LIFT → **SELECT DOOR TYPE** VERTICAL LIFT → **SELECT DOOR TYPE** ROLLING

NOTE: *Download the latest Installation Manual at support.partner.liftmaster.com.*

SELECT DOOR SETTINGS

FOR SECTIONAL DOORS ONLY

STANDARD, HIGH LIFT AND VERTICAL

1. To select Door Hanging, Cable Drum (and Sprocket JHDC/ JDC) settings, navigate to the SYSTEM SETTINGS > DOOR SETTINGS submenu.
2. Select Drum Type. Correct Drum Type is required for optimizing door profile and system operation. Drum Type options are based on user selection of Standard Lift, High Lift or Full Vertical Lift. (High Lift and Full Vertical Lift are shown for JDC / JHDC only)
3. Select Sprocket (for JDC / JHDC only). Select Custom to add a non-standard tooth-count.

FOR ROLLING DOORS ONLY

Select Rolling Door

1. Select Insulated or Non-Insulated Door Type
2. Select Height (increment of 2’)
   a. 8’, 10’, 12’, 14’, 16’, 18’, up to 28’
3. Select Width (increment of 2’)
   a. 8’, 10’, 12’, 14’, 16’, 18’, up to 28’
4. Select Sprocket (SKU dependent, please reference page 4)
   a. Sprocket choices: 50, 60, 72, 82, Custom

SET LIMITS

IMPORTANT: *When first commissioning the limits, the operator's encoder is learning the positioning of the door for the first time. As a result, the door must be moved a few seconds to allow for the encoder to begin tracking PRIOR to saving the limits on the LCD wall control. For example, if the door is in the open position when first setting limits, move the door down a few inches with the down arrow on the LCD wall control, then use the up arrow button to move the door back to the fully open limit before hitting the stop button to save the open limit in the LCD wall control.*
NOTE: *Numeric values displayed when setting limits are encoder markers and not travel distance. Once set, the encoder markers and travel distance can be confirmed under System Info menu.*

To set limits, navigate to the SYSTEM SETTING > DOOR POSITIONS submenu.

DOOR POSITION → **DOOR POSITION** OPEN LIMIT → **DOOR POSITION** CLOSE LIMIT → **DOOR POSITION** OPEN MID-STOP → **DOOR POSITION** CLOSE MID-STOP → **DOOR POSITION** RMV OPEN MID → **DOOR POSITION** RMV CLOSED MID

MID-STOP

This operator allows for the programming of a single mid-stop door position.

1. To set the open mid-stop position:
2. In Programming Mode, go to Door Position => Open Mid-Stop or Close Mid-Stop.
3. Use the Up/Down buttons to move the door to the desired position.
4. Select Save = Enter
5. To erase the mid-stop, select Erase Open Mid-Stop or Erase Close-Mid Stop option, then select Save=Enter.

NOTE: *Restoring defaults or resetting limits will erase the mid-stop position.*

Additional Programming

MONITORED EYES/EDGE CONFIGURATION

If monitored entrapment protection devices are wired to the system during the initial power-up, they will be Auto-Learned to the system, and monitoring in the **CLOSE** direction and the operating mode will automatically switch to B2.

NOTE: *The PHOTO EYE, LIGHT CUTAIN, RESISTIVE EDGE direction can be changed through menu option MONT EYES/ EDGE --> EYE/ EDGE # --> (select installed device)" --> DIR.*

CAUTION: IF THE EYE/EDGE DIRECTION was configured to OPEN. And at any point selecting the "LEARN ALL" option will relearn the device and revert the direction to CLOSE. Ensure to double check the EYE/ EDGE desired direction after each "LEARN ALL" by selecting MONT EYES/ EDGES -->(select installed device)" --> DIR

If no monitored sensor is attached, the system will default to C2 mode. To manually program an entrapment protection device, navigate to the SYSTEM SETTINGS > MONITORED EYES/EDGES submenu, otherwise it will Auto-Learn the monitored device.

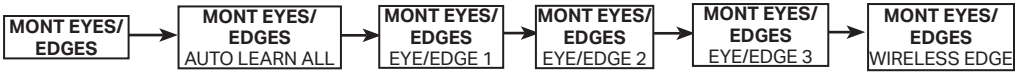

CABLE TENSION MONITOR

To view, or auto learn Cable Tension Monitor navigate to SYSTEM SETTINGS > CABLE TNS MONT

OPERATION MODE (RECOMMENDED)

To change the operating mode from the defaults B2 or C2, navigate to the SYSTEM SETTINGS > OPERATION MODE submenu.

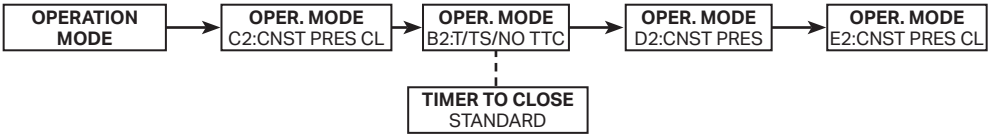

BATTERY OPTIONS

If Battery Backup (BBU) is connected, please note the default behavior in the event of AC power failure and low battery modes:

- For Firmware versions prior to 1.16:

AC Failure - Automatic door close (DOOR CLOSE)

Low Battery - Automatic door close and hold (DOOR CLOSE&HOLD)

- For Firmware versions 1.16 and newer:

AC Failure - No automatic door movement (BATTERY RUN)

Low Battery - No automatic door movement (BATTERY RUN)

To change the operator behavior with battery options, navigate to SYSTEM SETTINGS > BATTERY OPTIONS

Additional Programming

CONNECTIVITY (RECOMMENDED)

To connect the operator to a network, navigate to SYSTEM SETTINGS > CONNECTIVITY > LEARN > LEARN WIFI submenu. See the "myQ® Smart Facility Access" section to connect your devices to myQ® Business Facility.

Hold ENTER and DOWN for three seconds to open the System Information Menu.

To learn remotes/transmitters navigate to SYSTEM SETTINGS > CONNECTIVITY > LEARN > SUBMENU. Once in learning mode, press and release the desired button on the remote/transmitter to learn.

In Firmware 1.16 and newer, select RAPID LEARN to begin timed period to learn the same command (SBC/OPEN/CLOSE/STOP) on multiple transmitters.

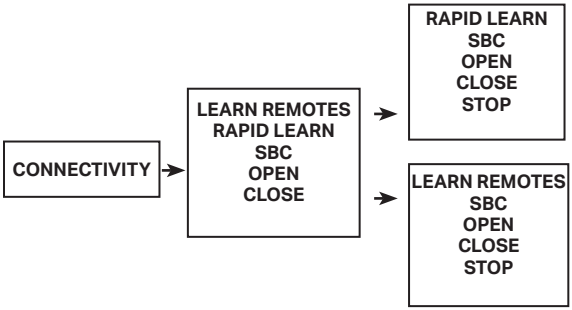

Note: *RAPID LEARN available in Firmware 1.16 and newer*

TRANSMITTER FREQUENCY

To switch transmitter frequency, navigate to SYSTEM SETTINGS > (Enter Passcode) >CONNECTIVITY > LEARN > RX REQUENCY > (Select desired frequency) > Save > EXIT menu

Additional Programming

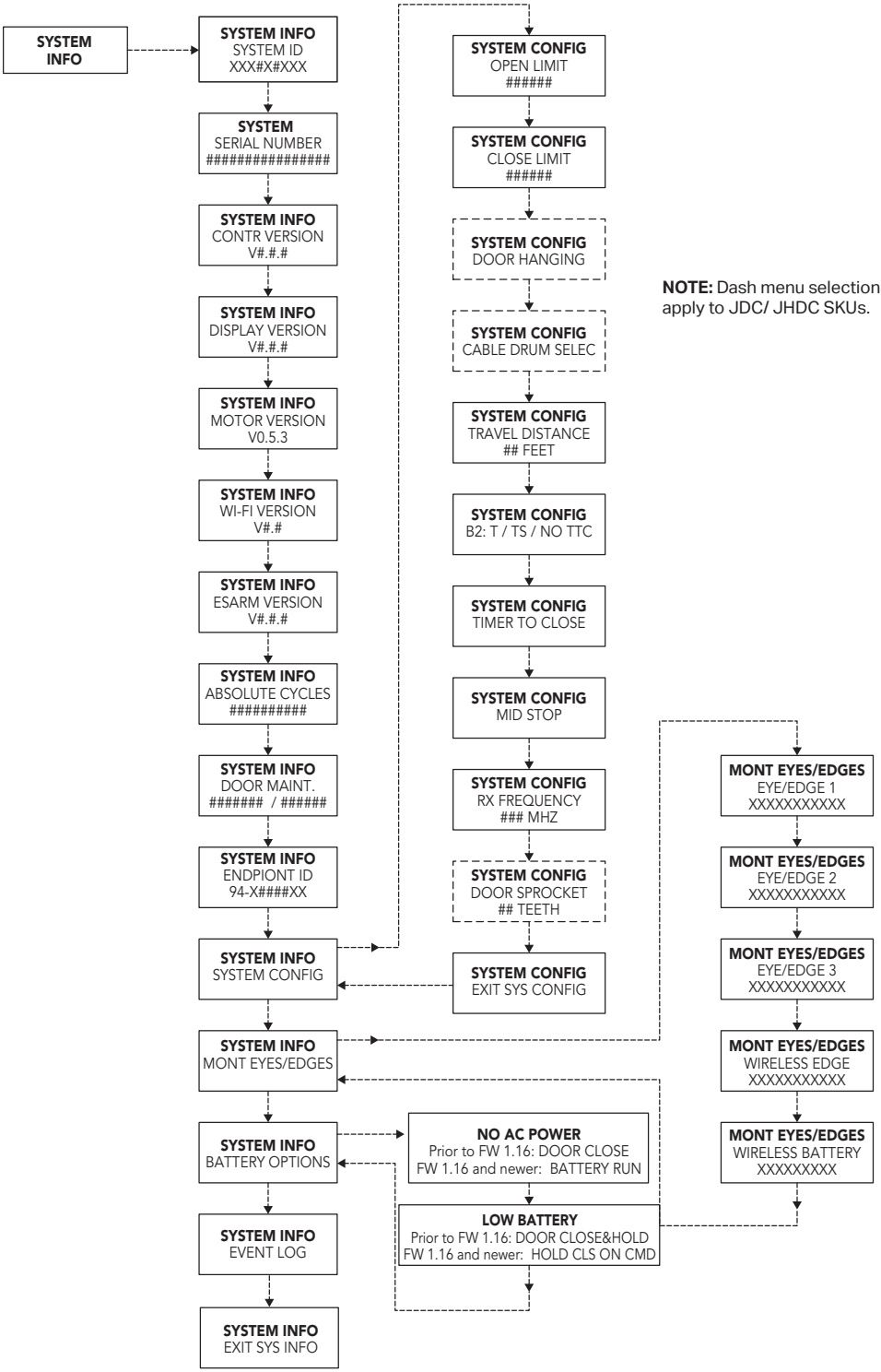

NOTE: Dash menu selection apply to JDC/ JHDC SKUs.

Additional Programming

Operating Modes

This operator is programmed to function in one of four different operating modes. See the rest of this section for more detailed information.

B2 MODE

- Works with buttons on wall controller, myQ Facility®, wired 3-Button Wall Controller, and 3-Button Transmitter; momentary to open, stop,and close.
- Works with Single Button Control and Single Button Transmitter; momentary to open, stop, close, and stop & reverse.
- A Monitored Entrapment Protection device is required to be connected for downward movement. Monitored Entrapment Protection devices are Auto-Learned or manually configured through the wall control menu..
- A Monitored Entrapment Protection device activation will reverse the door to its Open limit. An activated Monitored Entrapment Protection device can be overridden with 5 seconds of constant pressure on the Wall Control Close button.

Timer To Close is available in B2 Mode with two settings. The user can select a desired Timer to Close (TTC) timer under the Timers menu.

In B2 the Car Dealer feature is available. The Car Dealer input (typically a treadle switch, loop detector, or motion sensor) will open the door to mid-stop, and TTC will be enabled. Repeated Car Dealer Input will not open the door beyond the mid-stop and will reset the TTC timer. TTC can be set either to one time close or timer secure

In B2 the FSTS feature is available. For additional information please reference FSTS section.

B2 / T (ONE TIME CLOSE)

- After the TTC timer elapses operator will close the door.
- TTC Timer will be active at the Open Limit or at a defined mid-stop.
- The CLOSE button immediately closes the door.
- The STOP button cancels the TTC for that cycle (no automatic motion).
- The OPEN button resets the TTC timer.
- TTC will be disabled if the door reverses from an obstruction.
- Timer Defeat Input will stop the TTC timer

B2 / TS (TIMER SECURE)

- After TTC timer elapses operator will close door.
- TTC Timer will be active anywhere above close limit. The CLOSE button immediately closes the door.
- The STOP button resets the TTC timer (held button will pause, release resets)
- The OPEN button resets the TTC timer.
- LMEP activation resets the timer
- TTC will be enabled after Monitored Entrapment Protection device activation reverses the door to its Open limit. The controller will make infinite attempts to close the door until it reaches close limit.
- Timer Defeat Input will stop the TTC timer

Note: *For Firmware version 1.13 and 1.14, TTC will not be active after releasing the disconnect for RJDC models and re-engaging the motor for JHDC models - the next motion command (i.e. wall control, transmitter, etc.) will re-activate TTC.*

C2 MODE (DEFAULT)

- Works with buttons on wall controller, wired 3-Button Wall Controller, and 3-Button Transmitter*; momentary to open, stop, and constant pressure to close.
- Works with Single Button Control and Single Button Transmitter*; momentary to open, stop, and stop & reverse.
- Works without a Monitored Entrapment Protection device learned, but can operate if a Monitored Entrapment Protection device is learned and connected for downward movement.
- Monitored Entrapment Protection device activation will reverse the door to its Open limit. An activated Monitored Entrapment Protection device can be overridden with 5 seconds of constant pressure on the Wall Control Close button.

*Constant Pressure to Close is not available from a remote control device (transmitter or myQ® Business™).

Additional Programming

Determine and Set Operating Mode

Select the operating mode for your application from the menu in the Wall Controller.

WIRING TYPE	DEVICE	ACTION	STATE	RESPONSE
B2 - Momentary contact to open,close and stop, plus wiring for sensing device to reverse and auxiliary devices to open and close with open override. Programmable Mid-Stops available with this wiring type. Close Mid Stop available but not shown in table. Compatible with 3-Button Station, 1-Button Station, 1 and 3-Button Remote Control. Monitored Entrapment Protection (LMEP) Device required.	Front panel buttons (membrane) and 3-Button Wall Controller	OPEN button is pressed momentarily	Operator at OPEN limit	No change in state
			Operator at CLOSE limit	Door opens to the OPEN limit or Mid-Stop
			Door opening	No change in state
			Door closing	Door will auto reverse to OPEN limit or Mid-Stop
			Door at Open Mid-Stop	Door opens to the OPEN limit
			Door stopped during open or close cycle	Door opens to the OPEN limit or Mid-Stop
		CLOSE button is pressed momentarily	Operator at OPEN limit	Door closes to the CLOSE limit
			Operator at CLOSE limit	No change in state
			Door opening	No change in state
			Door closing	No change in state
			Door at Open Mid-Stop	Door closes to the CLOSE limit
			Door stopped during open or close cycle	Door closes to the CLOSE limit
		STOP button is pressed momentarily	Operator at OPEN limit	No change in state
			Operator at CLOSE limit	No change in state
			Door opening	Door stops
			Door closing	Door stops
			Door at Open Mid-Stop	No change in state
			Door stopped during open or close cycle	No change in state
		OPEN button is held (constant pressure)	Operator at OPEN limit	No change in state
			Operator at CLOSE limit	Door opens to the OPEN limit (bypasses Mid-Stop)
			Door opening	No change in state (bypasses Mid-Stop)
			Door closing	Door will auto reverse to OPEN limit (bypasses Mid-Stop)
			Door at Open Mid-Stop	Door opens to the OPEN limit
			Door stopped during open or close cycle	Door opens to the OPEN limit (bypasses Mid-Stop)
		CLOSE button is held (constant pressure)	Operator at OPEN limit	Door closes to the CLOSE limit
			Operator at CLOSE limit	No change in state
			Door opening	No change in state
			Door closing	No change in state
			Door at Open Mid-Stop	Door closes to the CLOSE limit
			Door stopped during open or close cycle	Door closes to the CLOSE limit
	3-Button Remote Control Programmed as OPEN/ CLOSE/STOP	OPEN button is pressed momentarily	Operator at OPEN limit	No change in state
			Operator at CLOSE limit	Door opens to closest OPEN limit or Mid-Stop
			Door opening	No change in state
			Door closing	Door will auto reverse to OPEN limit or Mid-Stop
			Door at Open Mid-Stop	Door opens to the OPEN limit
			Door stopped during open or close cycle	Door opens to the OPEN limit
		CLOSE button is pressed momentarily	Operator at OPEN limit	Door closes to the CLOSE limit
			Operator at CLOSE limit	No change in state
			Door opening	No change in state
			Door closing	No change in state
			Door at Open Mid-Stop	Door closes to the CLOSE limit
			Door stopped during open or close cycle	Door closes to the CLOSE limit
		STOP button is pressed momentarily	Operator at OPEN limit	No change in state
			Operator at CLOSE limit	No change in state
			Door opening	Door stops
			Door closing	Door stops
			Door at Open Mid-Stop	No change in state
			Door stopped during open or close cycle	No change in state
	Single Button Remote Control Programmed as SBC	Button is pressed	Operator at OPEN limit	Door closes to the CLOSE limit
			Operator at CLOSE limit	Door opens to the OPEN limit or Mid-Stop
			Door opening	Door stops
			Door closing	Door will auto reverse to OPEN limit or Mid-Stop
			Door at Open Mid-Stop	Door opens to the OPEN limit
			Door stopped during the open cycle	Door closes to the CLOSE limit
			Door stopped during the close cycle	Door opens to the OPEN limit or Mid-Stop

Additional Programming

WIRING TYPE	DEVICE	ACTION	STATE	RESPONSE
B2 (continued)	Single Button Wall Controller (Wired)	Button is pressed	Operator at OPEN limit	Door closes to the CLOSE limit
			Operator at CLOSE limit	Door opens to the OPEN limit or Mid-Stop
			Door opening	Door stops
			Door closing	Door will auto reverse to OPEN limit or Mid-Stop
			Door at Open Mid-Stop	Door opens to the OPEN limit
			Door stopped during the open cycle	Door closes to the CLOSE limit
			Door stopped during the close cycle	Door opens to the OPEN limit or Mid-Stop
		Button is held (constant pressure)	Door Opening	No change in state (bypasses Mid-Stop)
	myQ® Smart Facility Access	Open is pressed	Operator at OPEN limit	No change in state
			Operator at CLOSE limit	Door opens to the OPEN limit or Mid-Stop
			Door opening	No change in state
			Door closing	Door will auto reverse to OPEN limit or Mid-Stop
			Door at Open Mid-Stop	Door opens to the OPEN limit
			Door stopped during open or close cycle	Door opens to the OPEN limit or Mid-Stop
		Close is pressed:	Operator at OPEN limit	Door closes to the CLOSE limit
			Operator at CLOSE limit	No change in state
			Door opening	No change in state
			Door closing	No change in state
			Door at Open Mid-Stop	Door closes to the CLOSE limit
			Door stopped during open or close cycle	Door closes to the CLOSE limit
C2 Momentary contact to open and stop with constant pressure to close (wired devices ONLY), open override plus wiring for sensing device to reverse. Open Mid-Stop available with this mode type. Compatible with 3-Button Station and Single-Button Station	Front panel buttons (membrane) and 3-Button Wall Controller	OPEN button is pressed momentarily	Operator at OPEN limit	No change in state
			Operator at CLOSE limit	Door opens to the OPEN limit or Mid-Stop
			Door opening	No change in state
			Door closing	Door will auto reverse to OPEN limit or Mid-Stop
			Door at Open Mid-Stop	Door opens to the OPEN limit
			Door stopped during open or close cycle	Door opens to the OPEN limit or Mid-Stop
		CLOSE button is pressed momentarily	Operator at OPEN limit	Door closes and stops when button is released
			Operator at CLOSE limit	No change in state
			Door opening	No change in state
			Door closing	No change in state
			Door at Open Mid-Stop	Door closes and stops when button is released
			Door stopped during open or close cycle	Door closes and stops when button is released
		STOP button is pressed momentarily	Operator at OPEN limit	No change in state
			Operator at CLOSE limit	No change in state
			Door opening	Door stops
			Door closing	Door stops
			Door at Open Mid-Stop	No change in state
			Door stopped during open or close cycle	No change in state
		OPEN button is held (constant pressure)	Operator at OPEN limit	No change in state
			Operator at CLOSE limit	Door opens to OPEN limit (bypasses Mid-Stop)
			Door opening	No change in state (bypasses Mid-Stop)
			Door closing	Door will auto reverse to OPEN limit (bypasses Mid-Stop)
			Door at Open Mid-Stop	Door opens to the OPEN limit
			Door stopped during open or close cycle	Door opens to the OPEN limit (bypasses Mid-Stop)
		CLOSE button is held (constant pressure)	Operator at OPEN limit	Door closes to the CLOSE limit
			Operator at CLOSE limit	No change in state
			Door opening	No change in state
			Door closing	No change in state
			Door at Open Mid-Stop	Door closes to the CLOSE limit
			Door stopped during open or close cycle	Door closes to the CLOSE limit

Additional Programming

WIRING TYPE	DEVICE	ACTION	STATE	RESPONSE
C2 (continued)	3-Button Remote Control Programmed as OPEN/CLOSE/ STOP	OPEN button is pressed momentarily	Operator at OPEN limit	No change in state
			Operator at CLOSE limit	Door opens to the OPEN limit or Mid-Stop
			Door opening	No change in state
			Door closing	Door will auto reverse to OPEN limit or Mid-Stop
			Door at Open Mid-Stop	Door opens to the OPEN limit
			Door stopped during open or close cycle	Door opens to the OPEN limit or Mid-Stop
		CLOSE button is pressed momentarily	Operator at OPEN limit	No change in state
			Operator at CLOSE limit	No change in state
			Door opening	No change in state
			Door closing	No change in state
			Door at Open Mid-Stop	No change in state
			Door stopped during open or close cycle	No change in state
		STOP button is pressed momentarily	Operator at OPEN limit	No change in state
			Operator at CLOSE limit	No change in state
			Door opening	Door stops
			Door closing	Door stops
			Door at Open Mid-Stop	No change in state
			Door stopped during open or close cycle	No change in state
	Single Button Remote Control Programmed as SBC	Button is pressed	Operator at OPEN limit	No change in state
			Operator at CLOSE limit	Door opens to the OPEN limit or Mid-Stop
			Door opening	Door stops
			Door closing	Door will auto reverse to OPEN limit or Mid-Stop
			Door at Open Mid-Stop	Door opens to the OPEN limit
			Door stopped during open cycle	No change in state
			Door stopped during close cycle	Door opens to the OPEN limit or Mid-Stop
	Single Button Wall Controller (Wired)	Button is pressed	Operator at OPEN limit	Door closes and stops when button is released
			Operator at CLOSE limit	Door opens to the OPEN limit or Mid-Stop
			Door opening	Door stops
			Door closing	Door will auto reverse to OPEN limit or Mid-Stop
			Door at Open Mid-Stop	Door opens to the OPEN limit
			Door stopped during open cycle	Door closes and stops when button is released
			Door stopped during close cycle	Door opens to the OPEN limit or Mid-Stop
		Button is held (constant pressure)	Door Opening	No change in state or Mid-Stop
	myQ® Smart Facility Access	Open is pressed	Operator at OPEN limit	No change in state
			Operator at CLOSE limit	Door opens to the OPEN limit or Mid-Stop
			Door opening	No change in state
			Door closing	Door will auto reverse to OPEN limit or Mid-Stop
			Door at Open Mid-Stop	Door opens to the OPEN limit
			Door stopped during open or close cycle	Door opens to the OPEN limit or Mid-Stop
		Close is pressed	Operator at OPEN limit	No change in state
			Operator at CLOSE limit	No change in state
			Door opening	No change in state
			Door closing	No change in state
			Door at Open Mid-Stop	No change in state
			Door stopped during open or close cycle	No change in state

Additional Programming

WIRING TYPE	DEVICE	ACTION	STATE	RESPONSE
E2 - Momentary contact to open with override and constant pressure to close. Release of close button will cause door to reverse (roll-back feature) plus wiring for sensing device to reverse. Compatible with 3-Button Station.	3-Button Wall Controller	OPEN button is pressed momentarily	Operator at OPEN limit	No change in state
			Operator at CLOSE limit	Door opens to the OPEN limit or Mid-Stop
			Door opening	No change in state
			Door closing	Door will auto reverse to OPEN limit or Mid-Stop
			Door at Open Mid-Stop	Door opens to the OPEN limit
			Door stopped during open or close cycle	Door opens to the OPEN limit or Mid-Stop
		CLOSE button is pressed momentarily	Operator at OPEN limit	Door closes and auto reverses when button is released
			Operator at CLOSE limit	No change in state
			Door opening	No change in state
			Door closing	No change in state
			Door at Open Mid-Stop	Door closes and auto reverses when button is released
			Door stopped during open or close cycle	Door closes and auto reverses when button is released
		STOP button is pressed momentarily	Operator at OPEN limit	No change in state
			Operator at CLOSE limit	No change in state
			Door opening	Door stops
			Door closing	Door stops
			Door at Open Mid-Stop	No change in state
			Door stopped during open or close cycle	No change in state
		OPEN button is held (constant pressure)	Operator at OPEN limit	No change in state
			Operator at CLOSE limit	Door opens to the OPEN limit (bypasses Mid-Stop)
			Door opening	No change in state (bypasses Mid-Stop)
			Door closing	Door will auto reverse to OPEN limit (bypasses Mid-Stop)
			Door at Open Mid-Stop	Door opens to the OPEN limit
			Door stopped during open or close cycle	Door opens to the OPEN limit (bypasses Mid-Stop)
		CLOSE button is held (constant pressure)	Operator at OPEN limit	Door closes to the CLOSE limit
			Operator at CLOSE limit	No change in state
			Door opening	No change in state
			Door closing	No change in state
			Door at Open Mid-Stop	Door closes and auto reverses when button is released
			Door stopped during open or close cycle	Door closes and auto reverses when button is released
	3-Button Remote Control Programmed as OPEN/ CLOSE/ STOP	OPEN button is pressed momentarily	Operator at OPEN limit	No change in state
			Operator at CLOSE limit	Door opens to the OPEN limit or Mid-Stop
			Door opening	No change in state
			Door closing	Door will auto reverse to OPEN limit or Mid-Stop
			Door at Open Mid-Stop	Door opens to the OPEN limit
			Door stopped during open or close cycle	Door opens to the OPEN limit or Mid-Stop
		CLOSE button is pressed momentarily	Operator at OPEN limit	No change in state
			Operator at CLOSE limit	No change in state
			Door opening	No change in state
			Door closing	No change in state
			Door at Open Mid-Stop	No change in state
			Door stopped during open or close cycle	No change in state
		STOP button is pressed momentarily	Operator at OPEN limit	No change in state
			Operator at CLOSE limit	No change in state
			Door opening	Door stops
			Door closing	Door stops
			Door at Open Mid-Stop	No change in state
			Door stopped during open or close cycle	No change in state
	Single Button Remote Control	Button is pressed	Operator at OPEN limit	No change in state
			Operator at CLOSE limit	No change in state
			Door opening	No change in state
			Door closing	No change in state
			Door at Open Mid-Stop	No change in state
			Door stopped during open or close cycle	No change in state
	Single Button Wall Controller (Wired)	Button is pressed:	Operator at OPEN limit	No change in state
			Operator at CLOSE limit	No change in state
			Door opening	No change in state
			Door closing	No change in state
			Door at Open Mid-Stop	No change in state
			Door stopped during the open cycle	No change in state
			Door stopped during the close cycle	No change in state
	myQ	Door image is pressed:	Operator at OPEN limit	No change in state
			Operator at CLOSE limit	Door opens to the OPEN limit
			Door opening	No change in state
			Door closing	No change in state
			Door at Open Mid-Stop	No change in state
			Door stopped during open or close cycle	No change in state

Additional Programming

WIRING TYPE	DEVICE	ACTION	STATE	RESPONSE
D1 - Constant pressure to open and close with wiring for sensing device to stop. Compatible with 2 or 3-Button Station	3-Button Wall Controller	OPEN button is pressed momentarily	Operator at OPEN limit	No change in state
			Operator at CLOSE limit	Door opens and stops when button is released
			Door opening	No change in state
			Door closing	Door stops
			Door at Open Mid-Stop	Door opens and stops when button is released
			Door stopped during open or close cycle	Door opens and stops when button is released
		CLOSE button is pressed momentarily	Operator at OPEN limit	Door closes and stops when button is released
			Operator at CLOSE limit	No change in state
			Door opening	Door stops
			Door closing	No change in state
			Door at Open Mid-Stop	Door closes and stops when button is released
			Door stopped during open or close cycle	Door closes and stops when button is released
		STOP button is pressed momentarily	Operator at OPEN limit	No change in state
			Operator at CLOSE limit	No change in state
			Door opening	Door stops
			Door closing	Door stops
			Door at Open Mid-Stop	No change in state
			Door stopped during open or close cycle	Door stops only in the closed position
		OPEN button is held (constant pressure)	Operator at OPEN limit	No change in state
			Operator at CLOSE limit	Door opens to the OPEN limit
			Door opening	No change in state
			Door closing	Door stops
			Door at Open Mid-Stop	Door opens to the OPEN limit
			Door stopped during open or close cycle	Door stops only in the closed position
		CLOSE button is held (constant pressure)	Operator at OPEN limit	Door closes to the CLOSE limit
			Operator at CLOSE limit	No change in state
			Door opening	No change in state
			Door closing	No change in state
			Door at Open Mid-Stop	Door closes to the CLOSE limit
			Door stopped during open or close cycle	Door stops only in the open position
	3-Button Remote Control Programmed as OPEN / CLOSE / STOP Not all transmitters will give constant pressure to close	OPEN button is pressed momentarily	Operator at OPEN limit	No change in state
			Operator at CLOSE limit	No change in state
			Door opening	No change in state
			Door closing	No change in state
			Door at Open Mid-Stop	No change in state
			Door stopped during open or close cycle	No change in state
		CLOSE button is pressed momentarily	Operator at OPEN limit	No change in state
			Operator at CLOSE limit	No change in state
			Door opening	No change in state
			Door closing	No change in state
			Door at Open Mid-Stop	No change in state
			Door stopped during open or close cycle	No change in state
		STOP button is pressed momentarily	Operator at OPEN limit	No change in state
			Operator at CLOSE limit	No change in state
			Door opening	No change in state
			Door closing	No change in state
			Door at Open Mid-Stop	No change in state
			Door stopped during open or close cycle	No change in state
	Single Button Remote Control	Button is pressed	Operator at OPEN limit	No change in state
			Operator at CLOSE limit	No change in state
			Door opening	No change in state
			Door closing	No change in state
			Door at Open Mid-Stop	No change in state
			Door stopped during open or close cycle	No change in state
	Single Button Wall Controller (Wired)	Button is pressed:	Operator at OPEN limit	No change in state
			Operator at CLOSE limit	No change in state
			Door opening	No change in state
			Door closing	No change in state
			Door at Open Mid-Stop	No change in state
			Door stopped during the open cycle	No change in state
			Door stopped during the close cycle	No change in state
	myQ	Door image is pressed:	Operator at OPEN limit	No change in state
			Operator at CLOSE limit	No change in state
			Door opening	No change in state
			Door closing	No change in state
			Door at Open Mid-Stop	No change in state
			Door stopped during open or close cycle	No change in state

Additional Programming

WIRING TYPE	DEVICE	ACTION	STATE	RESPONSE
T - Momentary contact to open, close, and stop, with open override and Timer-To-Close (TTC). Every device that causes the door to open, except any sensing edge input device, activates the TTC. Auxiliary controls can be connected to open input to activate the TTC. If the TTC has been activated, the open button and radio control can recycle the timer. The stop button will deactivate the timer until the next command input. The TTC will function from the Open limit stop and Open Mid-Stop available with this mode type. Compatible with 3-Button Station, 1-Button Station and 1 and 3-Button Remote Control. Close Mid-Stop is available but not shown in table. Monitored Entrapment Protection (LMEP) Device required.	Front panel buttons (membrane) and 3-Button Wall Controller	OPEN button is pressed momentarily	Operator at OPEN limit	No change in state (Recycle timer)
			Operator at CLOSE limit	Door opens to the OPEN limit or Mid-Stop (and activates TTC)
			Door opening	No change in state
			Door closing	Door will auto reverse to OPEN limit or Mid-Stop (and activates TTC)
			Door at Open Mid-Stop	Door opens to the OPEN limit (and activates TTC)
			Door stopped during open or close cycle	Door opens to the OPEN limit or Mid-Stop (and activates TTC)
		CLOSE button is pressed momentarily	Operator at OPEN limit	Door closes to the CLOSE limit
			Operator at CLOSE limit	No change in state
			Door opening	No change in state
			Door closing	No change in state
			Door at Open Mid-Stop	Door closes to the CLOSE limit
			Door stopped during open or close cycle	Door closes to the CLOSE limit
		STOP button is pressed momentarily	Operator at OPEN limit	No change in state (Deactivate timer)
			Operator at CLOSE limit	No change in state
			Door opening	Door stops
			Door closing	Door stops
			Door at Open Mid-Stop	No change in state (Deactivate timer)
			Door stopped during open or close cycle	No change in state
		OPEN button is held (constant pressure)	Operator at OPEN limit	No change in state (Recycle & hold timer)
			Operator at CLOSE limit	Door opens to the OPEN limit (bypasses Mid-Stop) and activates TTC
			Door opening	No change in state (bypasses Mid-Stop)
			Door closing	Door will auto reverse to OPEN limit (bypasses Mid-Stop) and activates TTC
			Door at Open Mid-Stop	Door opens to the OPEN limit and activates TTC
			Door stopped during open or close cycle	Door opens to the OPEN limit (bypasses Mid-Stop) and activates TTC
		CLOSE button is held (constant pressure)	Operator at OPEN limit	Door closes to the CLOSE limit
			Operator at CLOSE limit	No change in state
			Door opening	No change in state
			Door closing	No change in state
			Door at Open Mid-Stop	Door closes to the CLOSE limit
			Door stopped during open or close cycle	Door closes to the CLOSE limit
	3-Button Remote Control Programmed as OPEN/ CLOSE/ STOP	OPEN button is pressed momentarily	Operator at OPEN limit	No change in state (Recycle timer)
			Operator at CLOSE limit	Door opens to the OPEN limit or Mid-Stop and activates TTC
			Door opening	No change in state
			Door closing	Door will auto reverse to OPEN limit or Mid-Stop and activates TTC
			Door at Open Mid-Stop	Door opens to the OPEN limit and activates TTC
			Door stopped during open or close cycle	Door opens to the OPEN limit or Mid-Stop and activates TTC
		CLOSE button is pressed momentarily	Operator at OPEN limit	Door closes to the CLOSE limit
			Operator at CLOSE limit	No change in state
			Door opening	No change in state
			Door closing	No change in state
			Door at Open Mid-Stop	Door closes to the CLOSE limit
			Door stopped during open or close cycle	Door closes to the CLOSE limit
		STOP button is pressed momentarily	Operator at OPEN limit	No change in state (Deactivate timer)
			Operator at CLOSE limit	No change in state
			Door opening	Door stops
			Door closing	Door stops
			Door at Open Mid-Stop	No change in state (Deactivate timer)
			Door stopped during open or close cycle	No change in state
	Single Button Remote Control Programmed as SBC	Button is pressed	Operator at OPEN limit	No change in state (Recycle TTC)
			Operator at CLOSE limit	Door opens to the OPEN limit or Mid-Stop and activates TTC
			Door opening	Door stops
			Door closing	Door will auto reverse to OPEN limit or Mid-Stop and activates TTC
			Door at Open Mid-Stop	Door opens to the OPEN limit and activates TTC
			Door stopped during the open cycle	Door closes to the CLOSE limit
			Door stopped during the close cycle	Door opens to the OPEN limit or Mid-Stop and activates TTC

Additional Programming

WIRING TYPE	DEVICE	ACTION	STATE	RESPONSE
T (continued)	Single Button Wall Controller (Wired)	Button is pressed	Operator at OPEN limit	Door closes to the CLOSE limit
			Operator at CLOSE limit	Door opens to the OPEN limit or Mid-Stop
			Door opening	Door stops
			Door closing	Door will auto reverse to OPEN limit or Mid-Stop and activates TTC
			Door at Open Mid-Stop	Door opens to the OPEN limit and activates TTC
			Door stopped during the open cycle	Door closes to the CLOSE limit
			Door stopped during the close cycle	Door opens to the OPEN limit or Mid-Stop and activates TTC
		Button is held (constant pressure)	Door opening	No change in state
	myQ® Smart Facility Access	Open is pressed	Operator at OPEN limit	No change in state (Recycle timer)
			Operator at CLOSE limit	Door opens to the OPEN limit or Mid-Stop and activates TTC
			Door opening	No change in state
			Door closing	Door will auto reverse to OPEN limit or Mid-Stop and activates TTC
			Door at Open Mid-Stop	Door opens to the OPEN limit and activates TTC
			Door stopped during open or close cycle	Door opens to the OPEN limit or Mid-Stop and activates TTC
		Close is pressed	Operator at OPEN limit	Door closes to the CLOSE limit
			Operator at CLOSE limit	No change in state
			Door opening	No change in state
			Door closing	No change in state
			Door at Open Mid-Stop	Door closes to the CLOSE limit
			Door stopped during open or close cycle	Door closes to the CLOSE limit
TS - This mode will attempt to close the door from any position except when fully closed, or when a Entrapment Protection input is present. The stop button will recycle the Timer-To-Close (TTC) at any position. To disable the TTC in this mode, installation of a defeat switch is required (see wiring diagram). Momentary contact to open, close, and stop with open override and TTC. Every device that causes door to open, including a reversing device, activates the TTC. Auxiliary controls can be connected to open input to activate the TTC. If the timer has been activated, the open button and radio control can recycle the timer. The TTC will function from the Open limit and Open mid stop with this operating mode type. Close Mid Stop available but not shown in table. Compatible with 3-Button Station, 1-Button Station and 1 and 3-Button Remote Control. Monitored Entrapment Protection (LMEP) Device required.	Front panel buttons (membrane) and 3-Button Wall Controller	OPEN button is pressed momentarily	Operator at OPEN limit	No change in state (Recycle TTC)
			Operator at CLOSE limit	Door opens to the OPEN limit or Mid-Stop and activates TTC
			Door opening	No change in state
			Door closing	Door will auto reverse to OPEN limit or Mid-Stop and activates TTC
			Door at Open Mid-Stop	Door opens to the OPEN limit and activates TTC
			Door stopped during open or close cycle	Door opens to the OPEN limit or Mid-Stop and activates TTC
		CLOSE button is pressed momentarily	Operator at OPEN limit	Door closes to the CLOSE limit
			Operator at CLOSE limit	No change in state
			Door opening	No change in state
			Door closing	No change in state
			Door at Open Mid-Stop	Door closes to the CLOSE limit
			Door stopped during open or close cycle	Door closes to the CLOSE limit
		STOP button is pressed momentarily	Operator at OPEN limit	No change in state (Recycle TTC)
			Operator at CLOSE limit	No change in state
			Door opening	Door stops and activates TTC
			Door closing	Door stops and activates TTC
			Door at Open Mid-Stop	No change in state (Recycle TTC)
			Door stopped during open or close cycle	No change in state (Recycle TTC)
		OPEN button is held (constant pressure)	Operator at OPEN limit	No change in state (Recycle & hold TTC)
			Operator at CLOSE limit	Door opens to the OPEN limit (bypasses Mid-Stop) and activates TTC
			Door opening	No change in state (bypasses Mid-Stop) and activates TTC
			Door closing	Door will auto reverse to OPEN limit (bypasses Mid-Stop) and activates TTC
			Door at Open Mid-Stop	Door opens to the OPEN limit and activates TTC
			Door stopped during open or close cycle	Door opens to the OPEN limit (bypasses Mid-Stop) and activates TTC
		CLOSE button is held (constant pressure)	Operator at OPEN limit	Door closes to the CLOSE limit
			Operator at CLOSE limit	No change in state
			Door opening	No change in state
			Door closing	No change in state
			Door at Open Mid-Stop	Door closes to the CLOSE limit
			Door stopped during open or close cycle	Door closes to the CLOSE limit

Additional Programming

WIRING TYPE	DEVICE	ACTION	STATE	RESPONSE
TS (continued)	3-Button Remote Control Programmed as OPEN/ CLOSE/STOP	OPEN button is pressed momentarily	Operator at OPEN limit	No change in state (Recycle TTC)
			Operator at CLOSE limit	Door opens to the OPEN limit or Mid-Stop and activates TTC
			Door opening	No change in state
			Door closing	Door will auto reverse to OPEN limit or Mid-Stop and activates TTC
			Door at Open Mid-Stop	Door opens to the OPEN limit and activates TTC
			Door stopped during open or close cycle	Door opens to the OPEN limit or Mid-Stop and activates TTC
		CLOSE button is pressed momentarily	Operator at OPEN limit	Door closes to the CLOSE limit
			Operator at CLOSE limit	No change in state
			Door opening	No change in state
			Door closing	No change in state
			Door at Open Mid-Stop	Door closes to the CLOSE limit
			Door stopped during open or close cycle	Door closes to the CLOSE limit
		STOP button is pressed momentarily	Operator at OPEN limit	No change in state (Recycle TTC)
			Operator at CLOSE limit	No change in state
			Door opening	Door stops and activates TTC
			Door closing	Door stops and activates TTC
			Door at Open Mid-Stop	No change in state (Recycle TTC)
			Door stopped during open or close cycle	No change in state (Recycle TTC)
	Single Button Remote Control Programmed as SBC	Button is pressed	Operator at OPEN limit	No change in state (Recycle TTC)
			Operator at CLOSE limit	Door opens to the OPEN limit or Mid-Stop and activates TTC
			Door opening	Door stops and activates TTC
			Door closing	Door will auto reverse to OPEN limit or Mid-Stop and activates TTC
			Door at Open Mid-Stop	Door opens to the OPEN limit and activates TTC
			Door stopped during the open cycle	Door closes to the CLOSE limit
			Door stopped during the close cycle	Door opens to the OPEN limit or Mid-Stop and activates TTC
	Single Button Wall Controller (Wired)	Button is pressed	Operator at OPEN limit	Door closes to the CLOSE limit
			Operator at CLOSE limit	Door opens to the OPEN limit or Mid-Stop and activates TTC
			Door opening	Door stops and activates TTC
			Door closing	Door will auto reverse to OPEN limit or Mid-Stop and activates TTC
			Door at Open Mid-Stop	Door opens to the OPEN limit
			Door stopped during the open cycle	Door closes to the CLOSE limit
			Door stopped during the close cycle	Door opens to the OPEN limit or Mid-Stop and activates TTC
		Button is held (constant pressure)	Door opening	No change in state or Mid-Stop and activates TTC
	myQ® Smart Facility Access	Open is pressed	Operator at OPEN limit	No change in state (Recycle TTC)
			Operator at CLOSE limit	Door opens to the OPEN limit or Mid-Stop (activates TTC)
			Door opening	No change in state
			Door closing	Door will auto reverse to OPEN limit or Mid-Stop and activates TTC
			Door at Open Mid-Stop	Door opens to the OPEN limit and activates TTC
			Door stopped during open or close cycle	Door opens to the OPEN limit or Mid-Stop and activates TTC
		Close is pressed	Operator at OPEN limit	Door closes to the CLOSE limit
			Operator at CLOSE limit	No change in state
			Door opening	No change in state
			Door closing	No change in state
			Door at Open Mid-Stop	Door closes to the CLOSE limit
			Door stopped during open or close cycle	Door closes to the CLOSE limit

Additional Programming

RESET TO FACTORY DEFAULT

1. Press & Hold the ENTER/STOP and DOWN buttons for four seconds to access the system menu.
   NOTE: *Release buttons once screen goes blank.*
2. Scroll to "SYSTEM SETTINGS" and press the ENTER/STOP button.
3. In the passcode screen, press UP or DOWN button and Enter to entering passcode 326.
4. Scroll to "RESET FAC. DEF" and press ENTER, and then ENTER to save.

Once this is complete, cycle power to the unit. After reset, the device will return to the quick start commissioning menu for operator setup.

NOTE: *myQ, Wi-Fi, and the transmitters will not be erased.*

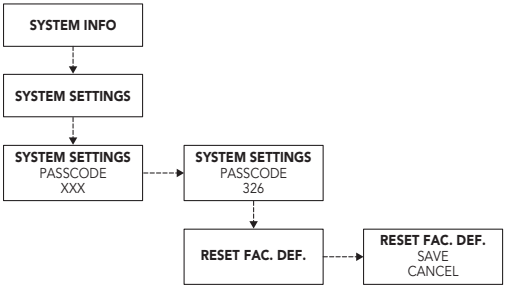

MAINTENANCE RESET / RESET CYCLES

NOTE: ONLY a certified door installer *shall perform the RESET CYCLES and MAINTENANCE COMPLETE procedure. After the completion of replacement parts and/or maintenance on the system and sub door system components.*

1. Press & Hold the ENTER/STOP and DOWN buttons for four seconds to access the system menu.
   NOTE: *Release buttons once screen goes blank.*
2. To enter the MAINTENANCE menu, scroll to "SYSTEM SETTINGS" and press the ENTER/STOP button.
3. In the passcode window, press UP or DOWN button, enter the pass code 326. Once the pass code has been entered, press the ENTER/STOP button once more.
4. Scroll to the MAINTENANCE menu and press the ENTER/STOP button.
5. To confirm maintenance has been completed, select MAINTENANCE COMPLETE > CONFIRM MAINTENANCE OK? > SAVE.
6. To reset cycles after maintenance complete, select MAINTENANCE RESET CYCLES > SAVE.
7. To modify the target cycles for maintenance, select MAINTENANCE CYCLES and press UP or DOWN button to adjust desired cycle count. Press the ENTER/STOP button to commit the desired cycle count.

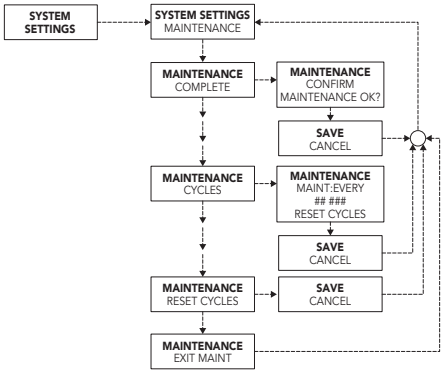

NOTE: *When configured Maintenance Cycles are reached the system will not inhibit door movement.*

Additional Programming

Programmable Inputs

- The controller contains four programmable inputs that may be configured to accept several different input devices.
- Navigate through the menus to SYSTEM SETTINGS (enter passcode) to PROG INPUTS. Select INP1, INP2, INP3, or INP4.
- Select a Function from the list. Press Enter.
- Select a Polarity from the list. Press Enter.

Function Options:

- Non-monitored Eye/Edge Input
- Car Dealer Input (typically loop detector, treadle hose, card reader)
- Timer Defeat
- FSTS

Radio

The controller has a built in Security+ 2.0® radio receiver, that can program up to 90 remote control devices and up to 30 keyless entry devices.

Programming Remote Controls and myQ® Devices

1. Select SYSTEM SETTINGS from the main menu (enter passcode: 326)
2. Select CONNECTIVITY.
3. Select one of: Learn myQ Devices or Remotes.
4. The operator will indicate the selected accessory is being learned.
5. Repeat as needed for any other devices and remotes.

Note: *Remotes are disabled from moving the door while accessing the programming menus. Exit the menus before testing the remotes.*

Resetting Remote Controls and myQ® Devices

1. Enter the menu and navigate to SYSTEM SETTINGS, and enter the passcode.
2. Navigate to CONNECTIVITY.
3. Enter the UNLEARN submenu.
   - To unlearn remotes, select REMOTES.
   - To unlearn myQ devices, select MYQ DEVICES.
4. Save your changes by selecting SAVE.
5. Exit the menu by holding the UP and STOP buttons on the wall control.

Reset Defaults

Parameter	Default Value
Operating Mode	C2
Timer to Close	0 sec.
Mid-Stop	Deactivated
Maintenance Alert System	Deactivated/Enabled
Limits	Reset
Battery Options	Reset (Prior to FW 1.16: AC Failure is reset to DOOR CLOSE; Low Battery is reset to DOOR CLOSE&HOLD FW 1.16 and newer: AC Failure is reset to BATTERY RUN; Low Battery is reset to HOLD CLS ON CMD)
Programmable Inputs (1-4)	Unlearned
User Adjusted Speed	Maximum speed.
Wi-Fi Credentials	Learned
SKU/Model ID	Learned (Can be changed in the maintenance menu)
LiftMaster Monitored device(s)	Deleted from memory (must be disconnected prior to reset)
Cable Tension Monitor device(s)	
Service Counter Interval	5000 cycles
Absolute Cycle Counter	Not Reset
Alarm	Reset to "ON"

NOTICE: This device complies with part 15 of the FCC rules and Innovation, Science and Economic Development Canada license-exempt RSSs. Operation is subject to the following two conditions: (1) this device may not cause harmful interference, and (2) this device must accept any interference received, including interference that may cause undesired operation.

Any changes or modifications not expressly approved by the party responsible for compliance could void the user's authority to operate the equipment.

This device must be installed to ensure a minimum 20 cm (8 in.) distance is maintained between users/bystanders and device.

This device has been tested and found to comply with the limits for a Class A digital device, pursuant to part 15 of the FCC rules and Industry Canada ICES standard. These limits are designed to provide reasonable protection against harmful interference in a commercial installation. This equipment generates, uses and can radiate radio frequency energy and, if not installed and used in accordance with the instructions, may cause harmful interference to radio communications. However, there is no guarantee that interference will not occur in a particular installation. If this equipment does cause harmful interference to radio or television reception, which can be determined by turning the equipment off and on, the user is encouraged to try to correct the interference by one or more of the following measures:

- **Reorient or relocate the receiving antenna.**
- **Increase the separation between the equipment and receiver.**
- **Connect the equipment into an outlet on a circuit different from that to which the receiver is connected.**
- **Consult the dealer or an experienced radio/TV technician for help.**

Additional Programming

Provisioning Wi-Fi

Follow the below instructions to pair the operator:

1. Press the "STOP/ENTER" and "DOWN" buttons at the same time for 3+ seconds to enter the operator menu.
2. Scroll down to "SYSTEM SETTINGS" with the "UP" and "DOWN" buttons and press "ENTER". You will be prompted to enter the passcode for the operator.
3. Enter 326 as the passcode.
4. Scroll down to "CONNECTIVITY" and press "ENTER".
5. Press "ENTER" again to select "CONNECTIVITY LEARN".
6. Scroll down to "LEARN WIFI" and press "ENTER". The operator will now be in Learn Mode.
7. Using your own device (laptop, tablet, or smart phone) go to your device's Wi-Fi setting and search for the Wi-Fi network called myQ-nnn where the nnn is the last 3 serial numbers of your operator. Select that Wi-Fi network.
8. Once your device (laptop, tablet, or smart phone) is connected to the operator, open a web browser and go to setup.myqdevice.com or the direct IP address which is 192.168.1.1 on your device and follow the instructions.

WARNING

To avoid SERIOUS personal INJURY or DEATH:

- Disconnect electric power BEFORE performing ANY adjustments, maintenance or adding of accessories.
- ALL maintenance MUST be performed by an Authorized Service Technician.

Resetting Wi-Fi Credentials

1. Enter the menu and navigate to SYSTEM SETTINGS, and enter the passcode.
2. Navigate to CONNECTIVITY.
3. Enter the UNLEARN submenu.
4. Navigate to WI-FI.
5. Save your changes by selecting SAVE.
6. Exit the menu by holding the up and stop buttons on the wall control.

myQ® Smart Facility Access

One Platform allows you to manage access for unlimited facilities, users and vehicles.

The myQ® Smart Facility Access allows you to control all your access points in the facility from the myQ® website application from anywhere. Monitor and control your vehicular access doors, gated entry locations, and even dock positions from a universal platform. myQ® technology uses a 900Mhz signal or a Wi-Fi connection to communicate securely from your connected devices to myQ® enabled accessories or directly to a Wi-Fi network.

Setup a myQ® Smart Facility Access Account

NOTE: *If you have an existing myQ® account, your myQ® Business™ account will have the same passcode.*

We have made the account setup process easier than ever. It's completely self-service. Go to Account.myQ.com and begin the process.

1. Select Country, Name, email, and create passcode.
2. Verify the email with a 4-digit code.
3. Select property manager or partner.
4. To create a myQ® Facility, select property type, property name, property manager information. You are now ready to access your dashboard and all other myQ® features.
5. Set up the Facility and add users and groups to provide access to the Facility (refer to the available Help in myQ® Business™).
6. You will get a welcome email from LiftMaster. Accept the invitation and register or login to your account.
7. Set up the Facility and add users & groups to provide access to the Facility (refer to the available Help in myQ® Business™).
8. Follow on-screen prompts to get your Variable Speed Door Operator and additional devices connected.

NOTE: After all programming has been completed, please test all entrapment protection devices, per the instructions on page 33.

Auxiliary Relays Accessory Kit (AUXREL)

Configure the Relay Adapter

AUXILIARY RELAYS

- **Aux Relay Switches:** Set the AUX RELAY switches as needed to obtain the desired function as shown below.
- **J6 Input:** Communicator bus connects control board, expansion board, or relay adapter board.
- **J7 Input:** Communicator bus connects control board, expansion board, or relay adapter board.
- **AUX24:** Supplies +24Vdc up to 1AMP to wired accessories.

The expansion board and relay adapter board provide Normally Open (N.O.) and Normally Closed (N.C.) relay contacts to control external devices, for connection of Class 2, low voltage (42 Vdc [34 Vac] max 5 Amps) power sources only. Function of relay contact activation determined by switch settings.

AUX RELAY SETTING	SWITCH SETTINGS			AUX RELAY 1	AUX RELAY 2
	1	2	3		
Off (no feature selected)	OFF	OFF	OFF	Relay always off. Use this Aux Relay setting to conserve battery power.	
Open Limit Switch	OFF	OFF	ON	Energizes at open limit. Use with SAMS (Sequenced Access Management System, jointly with door).	
Closed Limit Switch	OFF	ON	OFF	Energizes when not at close limit. For an additional audible or visual display, connect an external light (low voltage).	
Door Motion	OFF	ON	ON	Energizes when motor is on. For an additional audible or visual display, connect an external buzzer or light (low voltage).	

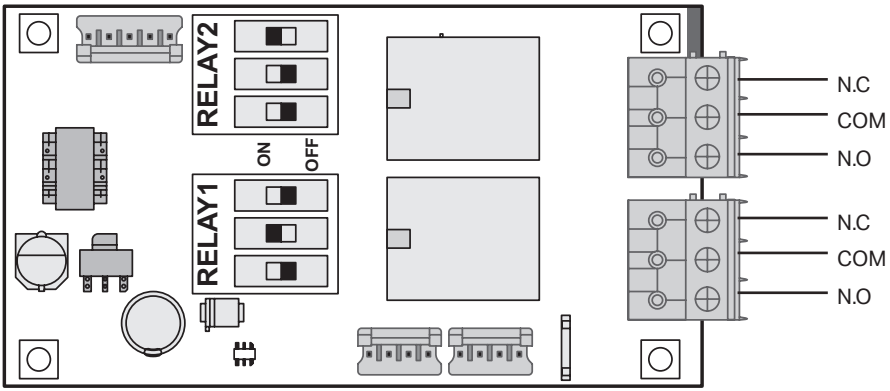

AUXREL - RELAY ADAPTER BOARD

Wiring iDock Controller to LiftMaster Maxum Operator

WARNING

To prevent possible SERIOUS INJURY or DEATH:

- ALL Maintenance or servicing MUST be performed by a trained door systems technician.
- Disconnect electric power (including battery backup if provided) BEFORE performing ANY adjustments or maintenance.
- Do NOT reconnect electrical power until instructed to do so.

An accessory providing the door state via output relays is required for the commercial door operator. If your machine is not equipped with the relay board accessory, part number AUXREL will be needed. See the instructions supplied with the kit for reference:

Reference Image #1

Set Relay 2 dip switches to Off, Off, On

Set Relay 1 dip switches to Off, On, Off

Wiring iDock Controller to LiftMaster Maxum Operator (continued)

Electrical Connections	
iDOCK Controllers with Small Terminal	**iDOCK Controllers with Large Terminal**
1. Remove factory installed yellow jumper, wires in the iDock connected on terminals:	
2. On terminals 20, 21, 29, 30	2. On terminals 30, 31, 51, 52
3. A total of 4 wires (18-22 gauge) will be needed between the AUXREL board and the iDock Controller	
4. Terminate the LiftMaster AUXREL wiring on the iDock controller using Figure A below.	4. Terminate the LiftMaster AUXREL wiring on the iDock controller using Figure B below.
Open Limit a. Terminal 21 = Relay 2, Common b. Terminal 29 = Relay 2, N.O. Close Limit c. Terminal 20 = Relay 1, Common d. Terminal 30 = Relay 1, N.C.	Open Limit a. Terminal 30 = Relay 2, Common b. Terminal 51 = Relay 2, N.O. Close Limit c. Terminal 31 = Relay 1, Common d. Terminal 52 = Relay 1, N.C.
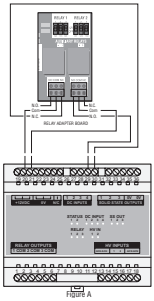 FIGURE A	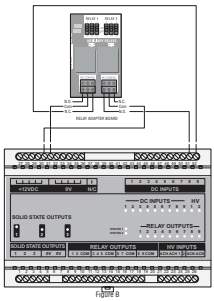 FIGURE B

Small Board Testing Operation	
Small Terminal Board – Aux Limit Operation	**Large Terminal Controller – Aux Limit Operation**
1. After the connections have been made, safely energize the equipment.	
2. With the door in the Closed position	
3. The iDock terminal board DCINPUT #4 LED should be solid green	3. The iDock terminal board DCINPUT #9 LED should be solid green
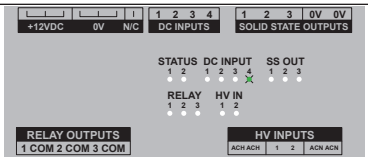 Door Closed - Input 4 ON	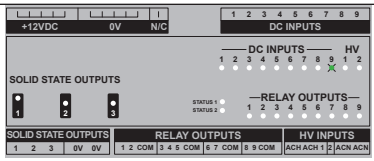 Door Closed - Input 9 ON
4. With the door in the Open position	
5. The iDock terminal board DCINPUT #3 LED should be solid green	5. The iDock terminal board DCINPUT #8 LED should be solid green
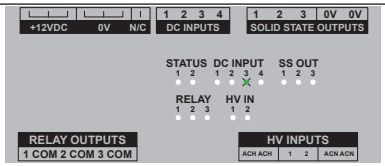 Door Closed - Input 3 ON	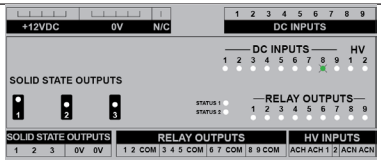 Door Closed - Input 8 ON

Wiring iDock Controller to LiftMaster Maxum Operator (continued)

Wiring Open, Close, Stop Between iDOCK Controller & MAXUM

Run four wires (18-22 gauge) between the iDock and the LiftMaster Maxum operator. Wire them up using the terminal chart and Figure C below:

Command	Terminals	
	MAXUM	iDOCK
Open	Open	3
Close	Close	2
Stop	Stop	1
Common	Common	4

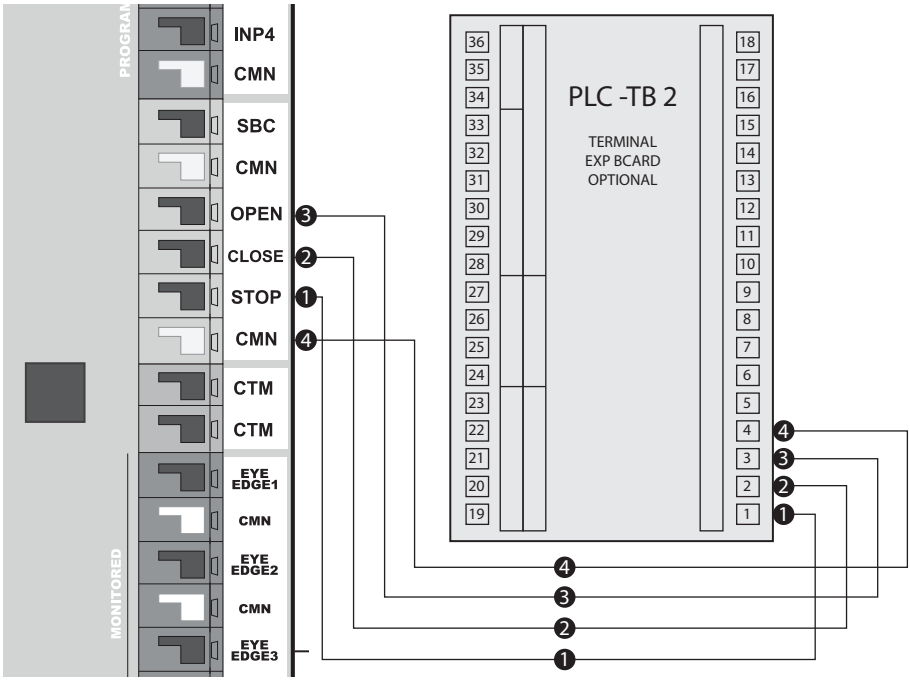

Troubleshooting

Additional Troubleshooting

The table below is a guide for best practice system troubleshooting, containing potential causes and corrective actions.

Symptom	Possible Causes	Diagnosis	Resolution
Powerhead main board is off (no LEDs are lit or blinking) (continued)	Transformer is overheating	Transformer has an internal thermal protection device which disconnects AC power if the transformer overheats. If the transformer is allowed to cool, AC power should reconnect and restore power to the operator.	Transformer should not normally overheat. If overheating occurs: Check door for imbalance and/or resistance Check ambient temperature and ensure it is within the operational ratings of the door operator. Ensure that air can move freely around the door operator, and that dust or other foreign matter is not preventing airflow.
	AC power absent or out of range	**Verify input AC voltage:** Measure AC voltage between 'L1' and 'L2' terminals at EMI filter board input connector. Verify voltage is within specifications. If voltage is outside specifications, see resolution.	If voltage is absent, restore power to the operator. Check for tripped breakers, blown fuses, faulty AC wiring, open disconnects, etc. If voltage is out of specification, consult an electrician.
	AC input voltage mis-selected (120V/240V models only)	Check whether the transformer connector is plugged in to the connectors on the EMI filter board marked '120V' or '240V.' Verify this matches the input AC voltage supplied to the operator.	If 240V power is applied when 120V is selected, damage to other components of the operator electronics may have occurred. Ensure voltage selection is corrected and verify the operator functions.
	Blown DC input fuses on main board	**Check fuses:** Measure voltage across DC IN fuses. If voltage is greater than 0.5V, fuses are blown. See resolution. Fuses may also be visually inspected. Fuses should have their internal metallic fuse element intact. If there is a break in the fuse element, fuse is blown.	Replace **both** DC IN fuses with automotive style ATO or ATC fuses, 30A 32V. Both DC IN fuses must be present and intact for proper operation of the door operator.
	Faulty Powerhead main board	Perform this test only after first **checking fuses.** Measure DC voltage between 'DC IN' + and - terminals. Voltage should be between 30 and 48 volts DC with motor stopped. If voltage is present and MAIN PWR LED is not lit, see resolution.	Turn off AC power and disconnect batteries (if present) for at least 30 seconds, then reconnect batteries (if present) and turn on AC power. If no LEDs are lit after cycling power, cycle power again as above but disconnect all cabling from mainboard except for main power wiring before restoring batteries/ AC power. If LEDs still do not light, replace main board. If LEDs light after disconnecting other devices, suspect a short or overload from a connected device.

Troubleshooting (continued)

Symptom	Possible Causes	Diagnosis	Resolution
Powerhead main board is off (no LEDs are lit or blinking) (continued)	Faulty EMI filter board	**Verify EMI filter board:** Perform this test only after first **verifying input AC voltage.** Measure AC voltage at EMI filter board output. Measure from brown wire to blue wire. [To do: check wire colors for 480V] Verify voltage is within specifications.	If input voltage is within specification but output voltage is outside specifications or is absent, replace the EMI filter board.
	Faulty Transformer	**Verify Transformer:** Perform this test only after first verifying the EMI filter board. Disconnect transformer output winding from rectifier(s) and measure the AC voltage across transformer output winding. Voltage should be between 22 and 35 volts AC. If voltage is out of range, see resolution.	If voltage is too high or too low, check that 120V/240V input voltage selection is correct. If voltage is absent: transformer has thermal protection to automatically disconnect input voltage if the transformer overheats. Allow transformer to cool if it is hot, and then re-test. If transformer is cool and voltage is still absent, replace the transformer.
	Faulty wiring or connections	Inspect all connections and wiring from EMI filter board, transformer, rectifiers, and DC IN terminals on the main board. Ensure there are no loose connections, cut wires, broken insulation, etc. Verify wiring matches wiring diagram.	Correct any issues found with wiring or connections.
	Faulty Rectifier	**Verify Rectifier:** If the transformer and all wiring is verified but DC voltage is still not present at the main board DC IN terminals, the rectifiers are most likely faulty. If an electrical meter with a diode test function is available, each of the 4 diodes internal to the bridge rectifiers may be checked using the diode check functionality: 1) check each diode in the forward direction and verify they conduct with ~ 1V drop or less 2) check each diode in the reverse direction and verify they do not conduct (meter will read the same as disconnected leads)	Replace faulty rectifier(s). Rectifier mounting screws must be tight enough to ensure good thermal contact with the chassis through the thermal interface pad. However, the rectifier screw must not be too tight or it could be damaged. [Torque spec here, even?] Interface between the rectifier and the chassis should be clean of any foreign substances before a new rectifier is installed.
	Short or overload in device connected to main board	Turn off power and disconnect batteries from main board. Disconnect all cabling from main board except for main power. Restore power and verify LEDs light. Reconnect wiring to main board one device at a time testing to see if any device causes the main board to fail to light LEDs.	If any device is found to cause an issue, the device may be faulty and should be repaired or replaced as necessary.

Troubleshooting (continued)

Symptom	Possible Causes	Diagnosis	Resolution
LCD wall control is off or not functioning (display shows nothing or is unlit, and wall control is unresponsive) (continued)	Multiple LCD wall controls wired to a single operator.	Only one LCD wall control is supported per operator. Check that only one is connected to the WALL CTRL terminals on the powerhead main board.	Disconnect any additional LCD wall controls and wire just one LCD wall control. If additional control stations are desired, use the SBC or OPEN, CLOSE, and STOP terminals instead.
	Wall control is wired to incorrect terminals on the powerhead main board.	Confirm that wall control wiring is run to the WALL CTRL terminals on the powerhead main board.	Move wall control wiring to the WALL CTRL terminals
	No power to powerhead main board	Verify MAIN PWR LED is lit on the mainboard. If if it unlit, main board may not have power.	Follow troubleshooting for symptom 'Powerhead main board is off'
	Wall control circuit shorted	**Test for wall control short circuit:** Power cycle the operator. Check WALL CTRL LED on powerhead main board. If LED is unlit, a short circuit is detected on the WALL CTRL terminals by the main board and the wall control is disabled.	Turn off AC power and disconnect batteries (if present). Remove wall control wiring from main board terminals. Restore batteries and AC power. If WALL CTRL LED remains unlit, short circuit may be internal to main board. Replace main board. If WALL CTRL LED is blinking, short is in wall control wiring or wall control. Reconnect wiring to main board. Disconnect wall control from wiring. Repeat test. If WALL CTRL LED is blinking, short is in wall control. Replace wall control. If WALL CTRL LED is off, short is in wiring. Check wiring and correct the issue.
	Bad connection between wiring and wall control	Visually inspect the wiring connections to the wall control screw terminals. Wires should be sandwiched between the screw and the exposed metallic pads on the circuit board. Ensure insulated part of wire is not caught between screw and circuit board.	Correct any issues noted during inspection
	No voltage output from powerhead main board WALL CTRL terminals	**Verify main board WALL CTRL terminals:** Disconnect wall control wires. Measure DC voltage at WALL CTRL terminals. Voltage should be between 11 and 13V DC.	If voltage is absent or out of range, turn off power to operator and disconnect batteries if present. Wait 30 seconds and then reconnect batteries and reapply AC power. If fault persists, replace main board

Troubleshooting (continued)

Symptom	Possible Causes	Diagnosis	Resolution
LCD wall control is off or not functioning (display shows nothing or is unlit, and wall control is unresponsive) (end)	Faulty wiring	Perform this test only after verifying main board WALL CTRL terminals. Verify wall control wiring: Disconnect wires from wall control and measure the DC voltage on the wiring at the end near the wall control. If voltage is not between 11 and 13 volts DC, wiring is faulty.	If voltage is absent or out of range, turn off power to operator and disconnect batteries if present. Wait 30 seconds and then reconnect batteries and reapply AC power. If fault persists, replace or repair wall control wiring.
	Faulty wall control	Perform this test only after verifying wall control wiring. Check voltage at wall control: With a voltmeter, test for 12VDC at the screw terminals on the rear of the wall control. If 12V is present and wall control is not active, wall control is faulty. If 12V is absent only when the wall control is connected, wall control may have internal short circuit.	Replace faulty wall control.
Main board DC IN fuses blow immediately upon powerup	Stray wiring/metal contacting main board	Visually inspect E-box. Check for any metallic objects or bare wires that may be inadvertently touching the main board.	Prevent metallic objects or bare wires from touching the main board. Turn power off and replace fuses, then re-apply power.
	Internal short on main board	Turn off AC power. Disconnect all wiring from main board except DC IN power wiring. Replace fuses and reapply power. If fuses still blow immediately, fault is in main board.	Replace main board
Door moves in wrong direction when pressing up/ down buttons	Reverse mounting mode configured wrong (reverse limits)	Check the setting for the reverse mounting mode (reverse limits)	Ensure the setting is correct
	Wiring for open and close terminals swapped (does not apply to LCD wall control)	Check that open button is connected to OPEN terminal and close button is connected to CLOSE terminal.	Correct wiring.
(ONLY applies to units with Battery Backup) Unit reports that it is on battery power even when AC power is present	AC power path issues	Disconnect batteries, check if powerhead main board powers off.	If powerhead main board loses power, leave batteries disconnected and follow troubleshooting for 'Powerhead main board is off'
	AC input voltage mis-selected (120V/240V models only)	Check whether the transformer connector is plugged in to the connectors on the EMI filter board marked '120V' or '240V.' Verify this matches the input AC voltage supplied to the operator.	Note that if incorrect voltage is applied to the operator, damage to the operator electronics may have occurred. Ensure voltage selection is correct and verify operator functionality.
	AC power out of range	**Verify input AC voltage:** Measure AC voltage between 'L1' and 'L2' terminals at EMI filter board input connector. Verify voltage is within specifications. If voltage is outside specifications, see resolution.	Ensure the circuit supplying the operator is the correct voltage class for the operator (e.g. 120V, 240V, or 480V) If voltage is out of specification for the circuit, consult an electrician.

Troubleshooting (continued)

Symptom	Possible Causes	Diagnosis	Resolution
Door runs slowly/at half speed	Wall control disconnected or damaged	If communications to the wall control is absent, system will run at half speed.	LCD Wall control is strongly recommended to be connected. If it is desired to run the system without a wall control, temporarily or permanently, the system can be returned to full speed operation by replacing the wall control wiring with a jumper wire. If the wall control is present but not functioning, see 'LCD wall control is off or not functioning'
Operator turns off despite backup battery being connected	Dead or worn batteries	Low battery voltage	Allow batteries to recharge Replace worn out batteries. Batteries must both be replaced together. Do not mix old and new batteries.
	Blown battery fuses on main board	Visually inspect battery fuses or check continuity	If fuses are blown, replace both fuses together
Operator runs momentarily then stops in limit learn mode	Encoder wiring fault	Inspect encoder cable for disconnection, bad connection, cut cable, etc.	Correct any issues found with encoder wiring
	Encoder fault or encoder interface fault	Go to limit learn process. Number displayed while in door limit learn mode is the encoder position. Jog door several inches in either direction and release button. Number displayed should change. Make sure to cancel changes or set limit again when finished.	If encoder position does not change with door movement, the encoder, encoder wiring, and powerhead main board are suspect. Check all three for any visible damage. Attempt power cycling and restoring factory defaults. Replace or repair suspected faulty components.
No motor movement; can't set limits during commissioning. And Wall Control displays "CHECK STOP CIRCT"	STOP input circuit is open due to wiring issue.	Check for wiring faults.	If STOP is not used, place a jumper wire between STOP input and CMN terminal.
		All devices in STOP circuit should use notmally closed contacts and be wired in series between STOP and CMN. Open circuit means STOP, closed circuit means GO.	If STOP input is used, correct any wiring problems or issues with the devices in the stop circuit.
	STOP button stuck on control stations. (does not apply to LCD wall control, hich does not cause this error)	Check for stuck stop buttons.	Repair any malfunctioning stop buttons.
	Failed STOP input (main board is bad)	Disconnect any wiring connected to the STOP input. Connect a short jumper wire between STOP input and CMN terminals to temporarily test. The CHECK STOP CIRCT message should go away. If it does not, there is a problem with the main board.	Power cycle the operator with stop jumper in place and ensure the problem still persists. If the problem does not resolve, replace the main board.

Troubleshooting (continued)

Symptom	Possible Causes	Diagnosis	Resolution
(2200 ONLY) A single or combination of the following faults: F04 (UNAUTH STOP) and/or F10 (Up Force) and/or F11 (Down Force) and limited door movement	Sticking brake Locked brake	Check sticking brake by pull on brake sash chain and request a door action through the wall control. Errors are no longer displayed and door moves as intended.	Replace brake
		Open ebox and check brake terminals on the main board. (Coil not being energized)	Properly connected brake terminals on the main board
(2200 ONLY) No faults and limited door movement			

If an error occurs, the idle screen is replaced by a screen showing the error code and a description of the error.

Error messages originate in one of three categories:

- Motor drive and power circuitry
- Door control codes related to the motor and encoder
- Option codes related to accessories used with the industrial DC operator.

Consult the Table of Error Codes below to determine the cause and corrective action. Depending on the type of error, user interaction may be required to clear the error. The error window closes when the error has been cleared/corrected.

Code	Display Message	Description	Possible Causes	Diagnosis	Resolution
	MOVE THE DOOR	Displayed in limit learn mode. The position encoder requires some movement before the position can be determined on powerup. Once the position has been successfully determined, the position will be maintained until power is lost.	Door has not been moved since the last power cycle	Upon initial powerup, this message will be displayed in the limit learn menu if no other movement has occurred.	Move the door slightly in either direction using the up or down buttons on the wall control. 'MOVE THE DOOR' message will disappear. If door does not move, or moves and stops, see troubleshooting steps for F04 UNAUTHORIZED STOP. If door moves without issue but 'MOVE THE DOOR' stays on the screen, see troubleshooting steps for F91 ENCODER.
F01	F01 CLOSE LIMIT	Door has moved beyond the lower end position	Operator has been manually hoisted below the lower end position (hoisted jackshaft models only)	Check position of door/operator with manual hoist	Move position back within normal limits. Adjust door position limits if necessary.
			Door is falling or drifting downward when operator is stopped	Check for excessive door imbalance in down direction	Rebalance door replace broken springs ensure correct springs and drums are used

Troubleshooting (continued)

Code	Display Message	Description	Possible Causes	Diagnosis	Resolution
F02	F02 OPEN LIMIT	Door has moved beyond the upper end position	Operator has been manually hoisted above the upper position limit (hoisted jackshaft models only)	Check position of door/operator with manual hoist	Move position back within normal limits. Adjust door position limits if necessary.
			Door is drifting upward when operator is stopped	Check for excessive door imbalance in up direction	Rebalance door Ensure correct springs and drums are used
F04	F04 UNAUTH. STOP (continued)	No motor motion was detected when the operator was attempting to move the motor.	Door encountered obstruction or other mechanical jam	Check doorway for obstruction. Check to ensure the mechanical system moves properly and without hangups or excessive resistance.	Remove obstruction
			Motor cable is disconnected or wiring fault	Check that motor cable is plugged into the powerhead main board completely. Ensure that motor cable is intact and in good condition.	Ensure motor connector is fully seated. Repair any problems with the cabling. If cabling is beyond repair, replace motor.

Troubleshooting (continued)

Code	Display Message	Description	Possible Causes	Diagnosis	Resolution
F04	F04 UNAUTH. STOP (end)	No motor motion was detected when the operator was attempting to move the motor.	Worn motor brushes	Motor DC resistance should be less than 3 ohms. If it is greater than 3 ohms, the brushes may fail to maintain contact with the commutator internal to the motor.	Replace motor Replace motor brushes (extended duty models only)
			Powerhead main board motor drive fault	Measure DC voltage across motor terminals at main board. In idle state, voltage should be 0. Activate door operator with open/close. Voltage may vary over a wide range, from several volts up to about 40 volts DC.	If voltage is absent during activation, check for other fault codes and correct as necessary. If no other fault codes are present, power cycle the operator and try again. If fault persists, reset settings to factory defaults and reconfigure the operators. If fault still persists, replace main board.
			Encoder wiring fault	Inspect encoder cable for disconnection, bad connection, cut cable, etc.	Correct any issues found with encoder wiring
			Encoder fault or encoder interface fault	Go to limit learn process. Number displayed while in door limit learn mode is the encoder position. Jog door several inches in either direction and release button. Number displayed should change. Make sure to cancel changes or set limit again when finished.	If encoder position does not change with door movement, the encoder, encoder wiring, and powerhead main board are suspect. Check all three for any visible damage. Attempt power cycling and restoring factory defaults. Replace or repair suspected faulty components.
			Motor drive fault occurred	Check for other fault codes	Review other fault codes and perform problem resolution as necessary.
		(2200 ONLY - Brake) No motor motion was detected when the operator was attempting to move the motor. May be set in conjunction with F10/F11/F12/F13.	Brake stuck closed	Brake stuck closed	Connect Wire harness to main.
			Wiring fault	Check for open circuit or short circuit. Disconnect harness from main board and run continuity test.	If wiring fault is found, replace.
F08	F08 NO CONFIG	Configuration was not found or was reset to factory setting	New operator is not configured.	If the operator is new, the configuration is initially unset.	Configure the operator per the normal process.
			Operator was factory reset from the menu	If the operator is factory reset, the configuration will be unset.	Configure the operator per the normal process.

Troubleshooting (continued)

Code	Display Message	Description	Possible Causes	Diagnosis	Resolution
F10	F10 UP FORCE	Operator detected an overcurrent condition moving in the up direction. Will sense resistance and stop door movement	Incorrect door speed set. Door Speed adjustment required	Wall control displays MODE : ---- OR F10 fault	Change speed in the System Settings Menu. Press and hold the Down & Enter button and release after display goes blank. Select System Settings --> Door Motion --> Door Speed. Select desired door speed, save changes and cycle door.
			Incorrect operator for door weight	Verify actual door weight is within operator rating. Reference operator door weight table in manual	Obtain and install correct operator per door weight specifications
			Incorrect Door Sprocket	Verify correct sprocket is used. Reference sprocket table in manual	Obtain and install correct Sprocket
			Unbalanced Door	Disconnect the door from operator and manually check door is balanced	Properly balance the door
			Pusher Springs exceed tension	If unit has push springs, visually inspect push spring tension in to door	Relearn limits with a max of 1.5 inches into push springs
			Door Mechanical Resistance - Worn Springs, Tracks, Rollers, Drums, Edge drag, CTM, door Panel bent / damage	Visually inspect and verify door mechanical components don't drag, pull or bind the door	Remove or repair any drag, pull or binding mechanical obstruction
			Low voltage at L1 / L2	Verify voltage at L1 / L2 legs meet operator current / voltage specification. Reference "Electrical Rating" table	If voltage does not meet specification contact a licensed electrician

Troubleshooting (continued)

Code	Display Message	Description	Possible Causes	Diagnosis	Resolution
F11	F11 DOWN FORCE	Operator detected an overcurrent condition moving in the down direction. Will sense resistance and reverse door to open.	Incorrect door speed set. Door Speed adjustment required	Wall control displays MODE : ---- OR F11 fault	Change speed in the System Settings Menu. Press and hold the Down & Enter button and release after display goes blank. Select System Settings --> Door Motion --> Door Speed. Select desired door speed, save changes and cycle door.
			Incorrect operator for door weight	Verify actual door weight is within operator rating. Reference operator door weight table in manual	Obtain and install correct operator per door weight specifications
			Incorrect Door Sprocket	Verify correct sprocket is used. Reference sprocket table in manual	Obtain and install correct Sprocket
			Unbalanced Door	Disconnect the door from operator and manually check door is balanced	Properly balance the door
			Pusher Springs exceed tension	If unit has push springs, visually inspect push spring tension in to door	Relearn limits with a max of 1.5 inches into push springs
			Door Mechanical Resistance - Worn Springs, Tracks, Rollers, Drums, Edge drag, CTM, door Panel bent / damage	Visually inspect and verify door mechanical components don't drag, pull or bind the door	Remove or repair any drag, pull or binding mechanical obstruction
			Low voltage at L1 / L2	Verify voltage at L1 / L2 legs meet operator current / voltage specification. Reference "Electrical Rating" table	If voltage does not meet specification contact a licensed electrician
			Miller Edge installed and takes longer to react/ respond. Down Force triggered before the Miller Edge reversal. (Operator is working as designed, condition is on Miller Edge)	Remove Miller Edge and verify false positive	Replace with Liftmaster edge or keep Miller Edge with the understanding that F11 may be a false positive. And wall control will only display two state: Connected or Missing.

Troubleshooting (continued)

Code	Display Message	Description	Possible Causes	Diagnosis	Resolution
F12 (FW v 1.10 & above)	F12 OVERLOAD UP	Operator detected a force overload overcurrent moving in the UP/OPEN direction.	Incorrect operator with door weight	Verify actual door weight is withing operator specification rating. Reference operator door weight table in manual.	Order/ Obtain correct weight capacity operator
			Incorrect Door Sprocket	Verify correct sprocket is used. Reference sprocket table in manual.	Obtain and install correct sprocket
			Unbalanced Door	Disconnect the door from operator and manually check door is balanced at 3 different points of travel	Properly balance the door
			Pusher Springs exceed tension	If unit has push springs, visually inspect pusher spring tension on the door	Relearn limits with a max of 1.5 inches into pusher springs
			Door Mechanical Resistance (Worn springs, Tracks, Rollers, Drum, Edge drag, CTM, door Panel bent/ damage.	Visually inspect and verify door mechanical components don't drag, pull or bind the door	Repair any mechanical failures, binding or dragging
			Low Voltage at L1/L2	Verify voltage at L1/L2 legs meet operator current / voltage specification. Reference "Electrical Rating" table	If voltage does not meet specification contact a licensed electrician

Troubleshooting (continued)

Code	Display Message	Description	Possible Causes	Diagnosis	Resolution
F13 (FW v 1.10 & above)	F13 OVERLOAD DOWN	Operator detected a force overload overcurrent moving in the DOWN/CLOSE direction.	Incorrect operator with door weight	Verify actual door weight is withing operator specification rating. Reference operator door weight table in manual.	Order/ Obtain correct weight capacity operator
			Incorrect Door Sprocket	Verify correct sprocket is used. Reference sprocket table in manual.	Obtain and install correct sprocket
			Unbalanced Door	Disconnect the door from operator and manually check door is balanced at 3 different points of travel	Properly balance the door
			Close Limit set aggressive	Close limit set to aggressive in the close over pushing on floor	Relearn CLOSE limits, ensure door does not buckle/ bend or over pushes on floor
			Door Mechanical Resistance (Worn springs, Tracks, Rollers, Drum, Edge drag, CTM, door Panel bent/ damage.	Visually inspect and verify door mechanical components don't drag, pull or bind the door	Repair any mechanical failures, binding or dragging
			Low Voltage at L1/L2	Verify voltage at L1/L2 legs meet operator current / voltage specification. Reference "Electrical Rating" table	If voltage does not meet specification contact a licensed electrician
F14	F14 SET LIMITS	End positions are not set or stored	Limits were never set out of box	New product as shipped does not have any limits set	Learn door limits
			Settings were reset or invalidated from the menu	F14 error	Re-learn door limits

Troubleshooting (continued)

Code	Display Message	Description	Possible Causes	Diagnosis	Resolution
F19	F19 SYSTEM ID	System ID is not configured in the system. System ID is needed by the powerhead main board to correctly run the operator. (Service kit boards only)	System ID is unset (service board replacement)	F19 error	Configure system ID in the menu by using the LCD wall control. Ensure system ID is chosen properly. **Operator may not function properly if the chosen system ID does not match the operator.**
F23	F23 OVERTEMP	Motor drive circuitry temperature is too high. Message is displayed until the circuitry cools down.	Door imbalance or excessive resistance	Inspect door for imbalance or excessive resistance	Repair or correct conditions resulting in excessive door imbalance/resistance
			Poor airflow/ cooling	Check area around operator for adequate ventilation space on the sides, above, and below the operator. Check the electronics enclosure for dust or other debris near or behind the PCBA that restricts airflow or cooling.	Correct any airflow restrictions around or inside the operator to improve cooling of the electronics.
			Ambient temperature too hot	Measure ambient temperature near the powerhead when the overheating is occurring. Check against the temperature range specification for the product.	Product must be used within the specified operating temperature range or risk of damage to the operator is possible.
			Excessive gear reducer or motor drag	Check that the motor and gearbox rotate freely and smoothly when disconnected from the door	Correct any issues found, or replace any faulty or worn components producing excessive drag
			Faulty powerhead main board	If OVERTEMP fault never clears, even when the electronics have cooled, the main board may be faulty.	Replace main board.
			Faulty motor drawing excessive current	If motor is getting excessively hot or does not spin smoothly when powered, there could be an issue with the motor	Replace motor

Troubleshooting (continued)

Code	Display Message	Description	Possible Causes	Diagnosis	Resolution
F26	F26 OVER VOLT	Motor drive circuitry detected an overvoltage condition	AC input voltage mis-selected (120V/240V models only)	Check whether the transformer connector is plugged in to the connectors on the EMI filter board marked '120V' or '240V.' Verify this matches the input AC voltage supplied to the operator.	If 240V power is applied when 120V is selected, damage to other components of the operator electronics may have occurred. Ensure voltage selection is corrected and verify the operator functions.
			Door imbalance causes motor regeneration	Inspect door for imbalance or broken springs	Repair or correct conditions resulting in excessive door imbalance
			AC power out of range	Verify input AC voltage: Measure AC voltage between 'L1' and 'L2' terminals at EMI filter board input connector. Verify voltage is within specifications. If voltage is outside specifications, see resolution.	Ensure the circuit supplying the operator is the correct voltage class for the operator (e.g. 120V, 240V, or 480V) If voltage is out of specification for the circuit, consult an electrician.
F31 F32 F33	F31 WC OPEN HELD F32 WC CLOSE HELD F33 WC STOP HELD	Wall control buttons held/ stuck for at least 1 minute.	Wall control buttons stuck	Check that all buttons return to the normal state properly when released.	Repair, clean, or replace sticking buttons or controls as necessary.
			Faulty Wiring	Inspect Wall Control wiring to main board and Wall Control terminals	Correct any wiring faults found
			Faulty LCD wall control	Swap wall control with known-good unit	If known-good wall control resolves the issue, fault is with previous wall control
			Faulty powerhead main board	Remove all accessories from OPEN/CLOSE/STOP/ SBC terminals. Ensure wall control is replaced with a known-good unit for diagnosis.	Try power cycling the operator and restoring factory defaults. If problems persist, replace powerhead main PCBA
F34	F34 SBC HELD	Input SBC button held/ stuck for at least 2 minutes.	Input device wiring short or open circuit.	Inspect wiring at SBC terminals for open or short	Correct wiring fault

Troubleshooting (continued)

Code	Display Message	Description	Possible Causes	Diagnosis	Resolution
F35 F36 F37	F35 OPEN HELD F36 CLOSE HELD F37 STOP HELD	Input button held/ stuck for at least 2 minutes.	Input device wiring short or open circuit.	Inspect wiring at OPEN/ CLOSE/STOP terminals for open or short	Correct wiring fault
			Faulty accessory connected to OPEN/ CLOSE/ STOP terminal	Disconnect accessories from the terminals	If problem is resolved by disconnection of other external accessories, wiring issue, faulty accessory, or incompatible accessory
			Input device button stuck	Check that all buttons return to the normal state properly when released	Repair, clean, or replace sticking buttons or controls as necessary

Troubleshooting (continued)

Code	Display Message	Description	Possible Causes	Diagnosis	Resolution
F42 F45 F48	F42 EYE/ EDG1 MIS F45 EYE/ EDG2 MIS F48 EYE/ EDG3 MIS	Monitored eyes/ edges 1/2/3 learned, but no longer detected as present.	Certain Entrap-ment Protection devices may show as missing when they are blocked, even if they are present and functioning. * Miller Edge * CPS-OPEN4 These devices do not support "Blocked" state and will not send blocked error. Operator is functioning as designed.	See F41/F44/F47 errors: Entrapment Protection device blocked	Ensure only Entrapment Protection devices approved for use with the operator are used. Correct blocked Entrapment Protection device condition
			Improperly configured photoeye input	Check system settings item in the menu to check the device type setting for the input	Ensure the Entrapment Protection device type matches the device that is actually installed
			Unapproved Entrapment Protection device is being used	Ensure the Entrapment Protection device is approved for use with the operator	Replace the Entrapment Protection device with one that is approved for use with the operator
			Wiring fault to Entrapment Protection device	Check for LED status on photoeye type devices. Check wiring for short or open circuit Ensure wires are wired into correct terminals and that polarity is correct for polarity-sensitive devices	Correct wiring faults
			Damaged photo eyes or edge	Swap Entrapment Protection device with known-good device	If a known-good Entrapment Protection device works, replace the faulty Entrapment Protection device
			Damaged powerhead main board	Swap Entrapment Protection device with known-good device connected directly to the powerhead main board	If the main board still won't detect known-good Entrapment Protection devices connected directly to the board, power cycle the operator. If the problem persists, reset to factory defaults and configure again. If problem still persists, replace the powerhead main board.

Troubleshooting (continued)

Code	Display Message	Description	Possible Causes	Diagnosis	Resolution
F43 F46 F49	F43 EYE/ EDG1 BLK F46 EYE/ EDG2 BLK F49 EYE/ EDG3 BLK	Monitored eyes/ edges 1/2/3 were blocked or missing when the door was commanded to move.	See sections for F41/F42/F44/ F45/F47/F46 as applicable		
F51 F52 F53 F54 F55 F56 F57 F58	F51 INP1 BLOCK F52 INP1 CMND F53 INP2 BLOCK F54 INP2 CMND F55 INP3 BLOCK F56 INP3 CMND F57 INP4 BLOCK F58 INP4 CMND	Unmonitored eye/edge device triggered for 3 minutes or more on input 1/2/3/4, or blocked when door motion was requested	Obstruction in doorway is blocking unmonitored eye/ edge device	Check for obstructions	If obstructions are present, remove the obstruction
			Improperly configured input	Check system settings item in the menu to check the device type setting for the input	Ensure the device type matches the device that is actually installed
			Incompatible device is being used	INP1/2/3/4 inputs are compatible with dry-contact type devices. Ensure the device being used is a dry-contact type device.	If the device is incompatible, replace with one that is, or move the device to another input which is compatible with the device
			Wiring fault to device	Check wiring for short or open circuit Ensure wires are wired into correct terminals	Correct wiring faults
			Damaged device	Swap device with known-good device	If a known-good device works, replace the faulty device
			Damaged powerhead main board	Disconnect unmonitored eye/edge. Open circuit condition is equivalent to an unobstructed unmonitored eye/edge device.	If the main board still detects an obstruction with no device connected, power cycle the operator. If the problem persists, reset to factory defaults and configure again. If problem still persists, replace the powerhead main board.

Troubleshooting (continued)

Code	Display Message	Description	Possible Causes	Diagnosis	Resolution
F61	F61 CTM FAULT	Cable Tension Monitor (CTM) device triggered or missing	Cable tension lost	Check that CTM devices have proper cable tension beneath the roller on the arm, and that the roller is properly riding on the cable. Ensure the cables are properly wrapped on the cable drums.	If cable tension is lost, carefully resolve the issue, check that limits are set properly, and monitor the issue to ensure it is resolved. Ensure no binding occurs in door travel that could produce slack cables.
			Improperly configured input	Check system settings item in the menu to check the setting for the CTM input.	Ensure the configured number of CTM devices matches the number that are actually installed. Relearn CTM(s) if necessary.
			CTM wiring fault	Check wiring for short or open circuit Ensure wires are wired into the correct terminals	Correct wiring faults
			Damaged CTM device	Swap CTM(s) with known-good device Or verify CTM with multimeter on ohms range. A single CTM with the hinge open should measure 1000 Ohms (1 kOhm). When closed, a CTM should measure open-circuit.	If a known-good CTM works, replace the faulty CTM
			Damaged powerhead main board	Swap CTM(s) with known-good CTM(s) connected directly to the powerhead main board	If the main board still won't detect known-good CTM(s) connected directly to the board, the fault may exist with the main board. Attempt power cycling the unit and, failing that, resetting to factory defaults. If problem still persists, replace the main board.
F62	F62 WLESS BLK	Wireless edge blocked	Obstruction in doorway is blocking eye or contacting edge	Check for obstructions	If obstructions are present, remove the obstruction
			Unapproved Entrapment Protection device is being used	Ensure the Entrapment Protection device is approved for use with the wireless edge kit	Replace the Entrapment Protection device with one that is approved for use with the wireless edge kit
			Wiring fault to Entrapment Protection device	Check wiring for short or open circuit	Correct wiring faults
			Damaged edge	Swap Entrapment Protection device with known-good device	If a known-good Entrapment Protection device works, replace the faulty Entrapment Protection device
			Damaged wireless edge transmitter	Swap Entrapment Protection device with known-good device connected directly to the transmitter	If the wireless edge still shows blocked with known-good Entrapment Protection devices connected directly, power cycle the operator and the wireless edge transmitter. If problem still persists, replace the transmitter.

Troubleshooting (continued)

Code	Display Message	Description	Possible Causes	Diagnosis	Resolution
F63 F64	F63 WE BLE MISS F64 WE BLE MISS	Wireless edge receiver lost BLE (wireless) communications with edge F64 - CLOSE direction edge F63 - OPEN direction edge	Transmitter/ receiver pairing issue	WE BLE MISS error	Pair transmitters to the receiver
			Dead battery in transmitter	Check transmitter battery power	Replace batteries
			Interference in 2.4GHz band	Check for other devices using the 2.4GHz band that may be causing interference If other 2.4GHz devices have interference problems (e.g. Bluetooth® headset) there is likely interference.	Reduce 2.4GHz band congestion
			Distance between transmitter and receiver is too far	Intermittent or complete loss of signal	Shorten distance between transmitter and receiver
			Bad transmitter	Swap transmitter(s) with known-good transmitter(s) and pair to the receiver	If a known-good transmitter resolves the issue, replace the bad transmitter
			Bad receiver	Swap receiver with known-good receiver and pair to the transmitters	If known-good receiver resolves the issue, replace the bad receiver
F65 F66	F65 WE I2C MISS F66 WE I2C MISS	Wireless edge is configured, but the main powerhead board cannot communicate with the wireless edge receiver. F66 - CLOSE direction edge F65 - OPEN direction edge	Wireless edge removed	Wireless edge intentionally removed	If the wireless edge is no longer wanted, it can be unlearned from the entrapment protection devices menu by using the LCD wall control.
			Communication cable disconnected or damaged	Check cable between receiver and powerhead main board for disconnection or damage to the cabling.	Correct any issues or replace any faulty parts.
			Firmware glitch or transient condition	Power cycle the operator completely. If the power cycle does not resolve the issue, restore factory defaults settings and reconfigure the operator.	If the steps listed in the diagnosis resolve the issue, there may have been a transient condition that caused and issue that was resolved. If the issue occurs excessively, the problem may lie elsewhere.
			Bad receiver module or bad powerhead main board	Replace the receiver module with a known good unit.	If the problem is resolved, replace the receiver with a new one. If the known good unit still does not work, replace the powerhead main board.
			Other bad accessory on the I2C expansion bus	Temporarily remove other accessories from between the wireless edge receiver and the powerhead main board	If issue is resolved, add accessories back one by one to find the accessory that causes the issue, then troubleshoot that device

Troubleshooting (continued)

Code	Display Message	Description	Possible Causes	Diagnosis	Resolution
F68	F68 WE CRITBATT	Wireless edge transmitter has low battery	The battery in the wireless edge transmitter is low	Check battery condition in wireless edge transmitter	Replace battery in wireless edge transmitter.
F89	F89 WC DISC	Indicates wall control is not detected	Wall control is intentionally disconnected	See resolution	Liftmaster strongly recommends using an LCD wall control with the operator. This error can be cleared by placing a jumper wire between the WALL CTRL terminals on the powerhead main board. If the jumper is removed and a wall control reconnected, the system may require a power cycle to recognize the new wall control. (Reference Headless Mode)
			Wall control is wired but off or not functional	Check wall control for display back light, text on the display, and function of open/close/stop buttons	If LCD wall control isn't functioning properly, see diagnosis for fault 'LCD wall control is off or not functioning'
F91	F91 ENCODER	The system has detected irregularities in the signals received from the encoder.	Direction of rotation incorrect	Watch operator output shaft when commanding operator to open. If output shaft rotates in the close direction, then rotation direction is incorrect.	Ensure motor red and black wires match the labeling on the powerhead main board near the motor connector. Ensure reverse mount setting is set properly.
			System ID mismatch between powerhead main board and operator chassis can cause the encoder to not be recognized.	Check that the system ID in the system information menu matches the model of the operator	Main board system ID must match the operator. Replacement service kit main boards allow setting the system ID using the menu on the LCD wall control. Factory installed boards cannot have the System ID set manually.
			Door is drifting up or down due to imbalance when starting	Check for excessive door imbalance	Re-balance door
			Encoder wiring fault	Inspect encoder cable for disconnection, bad connection, cut cable, etc.	Correct any issues found with encoder wiring
			Encoder fault or encoder interface fault	Go to limit learn process. Number displayed while in door limit learn mode is the encoder position. Jog door several inches in either direction and release button. Number displayed should change. Make sure to cancel changes or set limit again when finished.	If encoder position does not change with door movement, ensure system ID in the system information menu matches the operator. If the system ID matches but the problem persists, the encoder, encoder wiring, and powerhead main board are suspect. Check all three for any visible damage. Replace or repair suspected faulty components.

Troubleshooting (continued)

Code	Display Message	Description	Possible Causes	Diagnosis	Resolution
F95	F95 MOTOR COMM	Message with invalid format received from motor MCU.	Powerhead main board firmware glitch or hardware damage.	Fault is internal to the powerhead main board. See resolution.	Power cycle the operator. If the issue persists, reset the settings to factory defaults and reconfigure the operator. If the issue still persists, replace powerhead main PCBA.
F96	F96 INTR LOCK	INTR LOCK circuit was broken Motor drive circuit is disabled when the INTR LOCK circuit is open. INTER LOCK circuit consists of the INTR LOCK wiring terminals and the hoist chain interlock switch. |OR| J-Disconnect interlock switch. Operators without a Manual Hoist |OR| J-Disconnect include a jumper to bypass the Hoist |OR| J-Disconnect interlock switch connections	Hoist is engaged (ONLY Manual Host models)	Check that the hoist mechanism is disengaged.	Pull the green rope to disengage the hoist.
			J-Disconnect is engaged (ONLY J-Disconnect models).	Verify J-Disconnect is disengaged.	Fully release sash chain from wall and operate door through button controls as normal.
			INTR LOCK devices disconnected or missing	Check to ensure INTR LOCK devices are properly connected to the INTR LOCK terminals INTR LOCK terminals should have jumper placed if no devices are connected.	Reconnect INTR LOCK devices. If no INTR LOCK devices are intended to be used, then place a wire jumper between both terminals.
			Hoist switch cable or hoist switch jumper disconnected or missing	Check to ensure hoist switch or jumper are properly connected.	Correct any wiring issues with the hoist switch cable or hoist switch jumper.
			Device connected to INTR LOCK terminals is open or INTR LOCK device is faulty	Check that any devices connected to INTR LOCK terminal are in their normal, closed state to allow the operator to move	Restore INTR LOCK devices to their normal state. If a faulty device is attached, repair or replace the device.
			Wiring fault	Check for open circuit or short circuit wiring faults for the INTR LOCK wiring.	If any wiring fault is found, correct the fault.
			Damaged powerhead main board	Disconnect INTR LOCK devices and replace with jumper. If fault goes away, issue is not with powerhead main board.	If the main board still won't resolve the fault with a jumper connected directly to the board, the fault may exist with the main board. Attempt power cycling the unit and, failing that, resetting to factory defaults. If problem still persists, replace the main board
F101	F101 BBU LOW	Battery is present but discharged (voltage is low)	Backup battery is discharged due to loss of AC power.	Check to ensure that AC power is present and in normal operating range for the operator	Restore AC power and ensure battery recharges properly
			Battery is worn out or has failed	Batteries can be tested with a suitable battery tester. Older batteries are more likely to be worn out, as are batteries that are used often.	Replace batteries. Always replace both batteries as a set. Do not mix old and new batteries or use mismatched types.

Troubleshooting (continued)

Code	Display Message	Description	Possible Causes	Diagnosis	Resolution
F102	F102 BBU DISCONN	Battery is learned to the system but the battery is not detected	Backup battery is disconnected	Verify all battery wiring is connected securely and properly to the correct terminals and with the correct polarity.	Correct any wiring issues.
			Battery is worn out or has failed	Batteries can be tested with a suitable battery tester. Older batteries are more likely to be worn out, as are batteries that are used often.	Replace batteries. Always replace both batteries as a set. Do not mix old and new batteries or use mismatched types.
			Battery fuses blown	Visually inspect battery fuses or measure the fuses with a multimeter for continuity.	If fuses are blown, replace both together with new fuses.
F105	F105 AC FAIL	AC failure. System is running on battery.	Power outage	Check for proper voltage at the input of the operator	Error code will resolve when power is restored
			Input voltage outside specifications	Check for proper voltage at the input of the operator	Ensure voltage supplied to the operator is within the specified operating range
F106	F106 WC SHORT	Indicates wall control is removed and jumpered out.	Wall control is intentionally disconnected	Error message is informational only.	LiftMaster strongly recommends using the provided LCD wall control with the operator.
			Wiring short circuit	Inspect wiring for short circuits, damage, etc.	Resolve any faults found, then power cycle the operator
			Damaged wall control	Replace wall control with known-good unit, then power cycle the operator	If known good wall control resolves the issue, replace the bad wall control
F120	F120 MAINT DUE	Maintenance counter reached preset limit	Maintenance counter reached preset limit	F120 error code	Reset or extend maintenance counter using the menu through the wall control. Reference section: **MAINTENANCE RESET / RESET CYCLES**
F121	F121 OVER CYCLED	Standard/ extended cycle count reached	Operator has been cycled too many times in a short period of time	Refer to specified cycle ratings for the operator model that is installed	Reduce cycle rate to ensure it is within specifications for the operator

Maintenance

Maintenance Schedule

For use with Maintenance Alert System. Check at the intervals listed in the following chart.

WARNING

To avoid SERIOUS personal INJURY or DEATH:

- Disconnect electric power BEFORE performing ANY adjustments or maintenance.
- ALL maintenance MUST be performed by a trained door systems technician.

Item	Procedure	Every Month	Every 3 Months or 5,000 Cycles	Every 6 Months or 10,000 Cycles
Drive Chain	• Check for excessive slack. • Check and adjust as required. • Lubricate.		●💧	
Sprockets	Check set screw tightness.		●	
Fasteners	Check and tighten as required.			●
Manual Hoist (if applicable)	Check and operate.			●
Shafts	Check for wear and lubricate.		●💧	
LiftMaster Monitored Entrapment Protection	Check alignment and functionality.	●		

💧 Use SAE 30 Oil (Never use grease or silicone spray)

- Do not lubricate motor. Motor bearings are rated for continuous operation.

● Inspect and service whenever a malfunction is observed or suspected.

How to order repair parts: LiftMaster.com

Accessories

Part #	Description	Image	Part #	Description	Image
CPS-U Range: Up to 30ft (Included as standard with every Maxum operator)	Monitored Dual-Sided Infrared Photoelectric Sensors NEMA 1		65-8202 Non-Monitored Entrapment Protection Device.	Pneumatic 14ft Sensing Edge Extension, Mod Kit	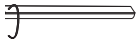
LMTBUL Range: Up to 90ft	Monitored Thru-Beam Photoelectric Sensors NEMA 4X		65-5202 Non-Monitored Entrapment Protection Device.	Pneumatic 14ft Sensing Edge with 2-Wire Take-Up Reel, Mod Kit	
LMRRUL Range: Up to 50ft	Monitored Retro-Reflective Photoelectric Sensors NEMA 4X		100MAPS	Plug-in 100mA Power Supply. 28ft cord length	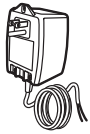
CPS-UN4 Range: Up to 45ft	Monitored Thru-Beam Photoelectric Sensors NEMA 4		811LMX Security+ 2.0	Programmable DIP Switch Single-Button Remote Control	
CPS-RPEN4 Range: Up to 50ft	Monitored Retro-Reflective Photoelectric Sensors NEMA 4		891LMMC Security+ 2.0	Single-Button Remote Control	
CPS-OPEN4 Range: Up to 45ft	Monitored Dual-Sided Photoelectric Sensors NEMA 4X		893LMMC Security+ 2.0	Three-Button Remote Control Controls up to 3 Openers	
850LM Security+ 2.0	Universal Receiver		877LMMC	Wireless Keypad 4-Digit Pin Code for Easy Entry	
STAR1000 Up to 1,000 Remotes	Commercial Access Control Receiver		LC36M Range: 3ft to 33ft	Monitored Light Curtain 36 in length	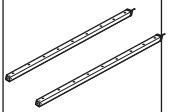

NOTE: *All transmitters listed (excluding 811LMX) are approved for use in USA/Canada only. 811LMX is also approved for Mexico / Columbia / Costa Rica / Puerto Rico.*

Accessories (continued)

Part #	Description	Image	Part #	Description	Image
OES-SD16 16ft Length Range: Up to 33ft	Monitored Optical Edge System NEMA 6		DCWALLCTL	LCD Wall Controller (Included with new "MAXUM" Operators)	
OES-SD24 24ft Length	Monitored Optical Edge System NEMA 6		02-101	Single-Button Wall Controller NEMA 1	
OES-RD16 16ft Length	Monitored Optical Edge System NEMA 6		02-102	2-Button Wall Controller NEMA 1	
LMWEKITU	Monitored Wireless Edge Kit		02-103L	3-Button Wall Controller NEMA 1	
LMWETXU	Monitored Wireless Edge Transmitter		02-406	3-Button Outdoor Wall Controller with Single Key Control NEMA 4/12	
CPS-EI	Edge Interface 4-Wire Monitored		02-403-N4XALD	3-Button Outdoor Controller NEMA N4/4X/12	
K41-0156-000	Cable Tension Monitor (Left)		K41-0157-000	Cable Tension Monitor (Right)	

NOTE: *For a full list of trolley kits, including* ***dual trolley, auxiliary trolley and dual auxiliary trolley*** *modification kits, please reference the Partner Portal, the Accessory Price List or the MAXUM Ordering Guide.*

NOTE: *Check "Testing" section for behaviors of all Entrapment Protection Devices during Installation.*

Accessories (continued)

Part #	Description	Image	Part #	Description	Image
86LM (15' [4.6 m]) 86LMT (25' [7.6 m])	Antenna Extension Kit	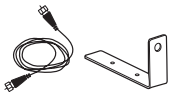	50-13529 (Also Known As: 50450)	Sectional Door Interlock Switch	
50-HERK2 23ft Cable	Motion Detector 24V Optional Remote Control (50-HERK-RC2)		50-12949 (Also Known As: 50401)	Rolling Door Interlock Switch	
RGL24LY	Red/Green Traffic Light Requires AUXREL card (sold separately)		RGL-CTL	Hi-Intensity Red/Green Traffic Light - Compact NEMA 4 Requires AUXREL card (sold separately)	
AUXREL	Auxiliary Relay Board, for switching on/ off auxiliary devices (lights, bells, horn/ strobes, etc.)	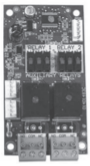	LPEXP + LOOPDETLM	LPEXP (Board only) and LOOPDETLM (Loop Detector only) are both required for full functionality.	

Accessories (continued)

ADDITIONAL FIELD INSTALLABLE ACCESSORY KITS			
Part #	**Description**	**Part #**	**Description**
DC7AH	7 AH Battery Backup Kit Compatible with all Maxum (non-NEMA4X)	**HOISTMOUNTMODDC**	Mount Bracket Kit to convert L5 GH mount for JDC, RJDC or JHDC install
CHNGUARD	Chain Guard Kit for 2" Output Shafts	**TRLQSLD**	Trolley Quiet Slider Kit
CHAINGUARD3IN	Chain Guard Kit for 3" Output Shafts		
CHAINTENSDC	1" Chain Tensioner (Spreader Bar)	**XF600VAC7**	600V Transformer Kit, For 700 Operators
CHAINTENS125DC	1.25" Chain Tensioner (Spreader Bar)	**XF600VAC12**	600V Transformer Kit, For 1200/2200 Operators
001A3982	Operator Cover For 700/1200 Operators	**XF208VAC7**	208V Transformer Kit, For 700 Operators
COVERDC	Operator Cover for all Maxum Wall-Mount Models	**XF208VAC12**	208V Transformer Kit, For 1200/2200 Operators
HTR **Requires COVERDC or 001A3982 operator cover**	Heater Kit for 120/240V 1/3PH Operators. Requires COVERDC or 001A3982 operator cover	**312HM**	315Mhz Universal Radio Receiver
HTR460 **Requires COVERDC or 001A3982 operator cover**	Heater Kit for 480V 3PH Operators. Requires COVERDC or 001A3982 operator cover	**412HM**	390Mhz Universal Radio Receiver
JAN41	#41 Chain and Sprocket Mod Kit for Rolling Sheet Doors	**71-1550B10LGH**	10-Tooth Operator Sprocket Kit 1in Bore x 1/4in Keyway; replaces 12-tooth drive sprocket to reduce speed 20%
FOHMODDC	Front of Hood Mount Bracket Kit	**K41-0564-000**	16-Tooth Operator Sprocket Kit, #41 Chain. Replaces 20-tooth sprocket on TDC12 to reduce speed 20% (16-tooth sprocket is standard on TDC22 models)
Other Compatible Devices: *Any 2-Wire Monitored Miller Edge Model with T2 Designator or 4-Wire Edge with 10 kilohm resistor in series. Miller Edge RBand Wireless Edge Sensor System (RBand Edge Transmitter Model RB-TX10 and Receiver Model RB-P-RX10C), used with the above ME series edge sensors.*			

Service Parts

For TDC Models Only

SERVICE KITS

Part #	Description
K41-0373-000	20-Tooth Drive Sprocket #48 (TDC7)
K41-0552-000	Operator Frame (For TDC 700 & 1200)
K41-0372-000	20-Tooth Drive Sprocket #41 (TDC12)
K41-0564-000	16-Tooth Drive Sprocket #41 (TDC12/TDC22)
K41-0482-000	Frame for TDC 2200
K41-0562-000	Motor Cap for TDC 2200

Item	Part #	Description
18	K75-10170	Trolley
19	K75-10174	Front Idler Assembly
20	K75-10259	Tracker Spacer
21	K10-10205	Header Bracket
22	K41-0565-000	Header Pivot Pin
K5	K75-12870	Door Arm Kit Complete with: Curved Arm, Straight Arm, Door Bracket and Hardware.
24		Door Track* (Call for pricing and availability)
25	10-10011M1	Frame
27	K11-10197	Take Up Bolt
28	K75-17034	Heavy Duty Straight Arm

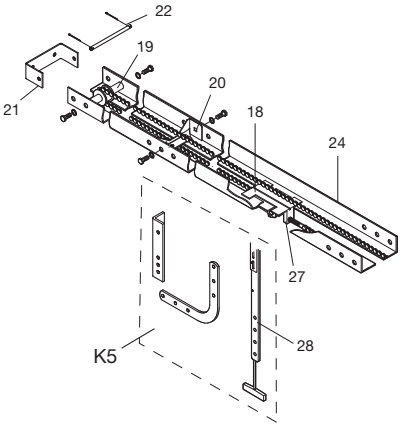

DOOR DRIVE CHAIN KITS

Part #	Description
TDC48-08	#48 Chain for TDC 700 - Doors to 8'
TDC48-10	#48 Chain for TDC 700 - Doors to 10'
TDC41-10	#41 Chain for TDC 1200 and 2200 - Doors to 10'
TDC48-12	#48 Chain for TDC 700 - Doors to 12'
TDC41-12	#41 Chain for TDC 1200 and 2200 - Doors to 12'
TDC48-14	#48 Chain for TDC 700 - Doors to 14'
TDC41-14	#41 Chain for TDC 1200 and 2200 - Doors to 14'
TDC48-16	#48 Chain for TDC 700 - Doors to 16'
TDC41-16	#41 Chain for TDC 1200 and 2200 - Doors to 16'
TDC48-18	#48 Chain for TDC 700 - Doors to 18'
TDC41-18	#41 Chain for TDC 1200 and 2200 - Doors to 18'
TDC48-20	#41 Chain (3/4 & 1 HP) - Doors to 20'
TDC41-20	#41 Chain for TDC 1200 and 2200 - Doors to 20'
TDC41-24	#41 Chain for TDC 1200 and 2200 - Doors to 24'

Service Parts (continued)

For JHDC Models Only (Service Kits)

Part #	Description
1910929FT12	Hoist Chain, 12ft Length
1910929FT25	Hoist Chain, 25ft Length
K41-0269-000	Disengage and Engage Ropes, 15 ft length
K41-0549-000	Disengage and Engage Ropes, 29 ft length
K41-0479-000	Hoist Assembly, JHDC 700, 1200, & 2200
K41-0480-000	Operator Frame, JHDC 2200 Only

For RJDC Models Only (Service Kits)

Part #	Description
K41-0539-000	Motor, Gear Box & Encoder (RJDC7)
K41-0541-000	Operator Frame (RJDC7)
K41-0542-000	Manual Release Subassembly w/Plastic Cover (RJDC7)
K41-0548-000	Plastic Cover (Only) for Manual Release (RJDC7)

Service Parts (continued)

Common Service Kits For JDC, RJDC, JHDC, TDC

Part #	Description		Part #	Description
K41-0374-000	Motor, Gear Box & Encoder (J/H 700 non-3in Shaft)		K41-0380-000	Bridge Rectifier 700/1200
K41-0540-000	Motor, Gear Box & Encoder (J/H 700 3in Shaft)		K41-0478-000	Bridge Rectifier 2200
K41-0375-000	Motor, Gear Box & Encoder (H 1200 non-3in Shaft)		K41-0381-000	Toroidal Transformer 700/120VAC-240VAC
K41-0376-000	Motor, Gear Box & Encoder (H 2200)		K41-0382-000	Toroidal Transformer 700/480VAC
K41-0377-000	Motor, Gear Box & Encoder (T 700)		K41-0383-000	Toroidal Transformer 1200/120VAC-240VAC
K41-0378-000	Motor, Gear Box & Encoder (T 1200)		K41-0384-000	Toroidal Transformer 1200/480VAC
K41-0379-000	Motor, Gear Box & Encoder (T 2200)		K41-0385-000	Toroidal Transformer 2200/120VAC-240VAC
K41-0409-000	1200 Extended Duty Motor, Gear Box & Encoder Hoist		K41-0386-000	Toroidal Transformer 2200/480VAC
K41-0410-000	1200 Extended Duty Motor, Gear Box & Encoder Trolley		K77-36541	Antenna
K41-0388-000MC	Main Board (All MAXUM Operators)		K41-0387-000	Encoder (with drive sprocket, snap ring, mounting plate, screws)
K41-0390-000	EMI Board (All MAXUM Operators 480VAC)		K41-0424-000	Motor with Endcap (JDC, RJDC, JHDC, TDC 700 Standard Duty)
K41-0391-000	EMI Board (All MAXUM Operators 120/240VAC)		K41-0425-000	Motor with Endcap (JHDC, TDC 1200 Standard Duty)
K41-0395-000	Control Box with Cover		K41-0426-000	Motor with Endcap (JHDC, TDC 1200 Extended Duty)
K41-0469-000	Motor Cap with Screws (For TDC & JDC 700 & 1200)		K41-0427-000	Motor with Endcap (JHDC, TDC 2200 Extended Duty)
K41-0551-000	Operator Frame (For JDC/JHDC7 & JHDC12)		K41-0429-000	Motor, T1200 EXT (For TDC12X)
K41-0481-000	Operator Frame, Left Side (For JHDC22)		K41-0467-000	Transformer Cover for T, J, RJ, JH, 700 & 1200
K41-0471-000	Motor, J2200 & T2200 EXT (For JHDC22 & TDC22)		K41-0484-000	Transformer Cover for TDC22 & JHDC22
K41-0413-000	Motor Brushes, Extended Duty Models Only		K41-0566-000	12-Tooth Operator Sprocket for #50 Chain, for JDC7, RJDC7, JHDC7/12

For 2200 Models Only

Part #	Description
K41-0476-000	Service Kit, Brake Only, For 2200 Models

Warranty

LIFTMASTER® LIMITED WARRANTY - MAXUM

LiftMaster ("Seller") warrants to the first retail purchaser of this product, for the residence in which this product is originally installed, that it is free from defects in materials and/or workmanship for a specific period of time as defined below (the "Warranty Period"). The warranty period commences from the date of purchase.

Battery Backup Kit	Photoeyes	Replacement Parts	LCD Wall Control	MAXUM Operator	
1 Year	1 Year	1 Year	2 Years	Standard Duty	5 YEARS/ 85,000* Cycles
				Extended Duty	5 YEARS/ 130,000* Cycles

* Cycle count measurement will commence at the start of the warranty period; however, cycle counts will not be used to determine warranty eligibility until conclusion of the first two (2) years of limited warranty period.

Where the limited warranty periods above indicate that the warranty period is measured by both passage of time and quantity of operator cycles both parameters will be considered at the time of warranty claim and, if one parameter is not met, the limited warranty will not apply. Where an accurate operator cycle count is unavailable due to, without limitation, replacement of a part critical to determining an accurate cycle count, the limited warranty period shall expire at the conclusion of the first two (2) years from the date of product installation. The proper operation of this product is dependent on your compliance with the instructions regarding installation, operation, and maintenance and testing of this product and associated door hardware. Failure to comply strictly with those instructions will void this limited warranty in its entirety.

If, during the limited warranty period, this product appears to contain a defect covered by this limited warranty, call

1-800-528-9131, toll free, before dismantling this product. You will be advised of disassembly and shipping instructions when you call. Then send the product or component, pre-paid and insured, as directed to our service center for warranty repair. Please include a brief description of the problem and a dated proof-of-purchase receipt with any product returned for warranty repair. Products returned to Seller for warranty repair, which upon receipt by Seller are confirmed to be defective and covered by this limited warranty, will be repaired or replaced (at Seller's sole option)

at no cost to you and returned pre-paid. Defective original manufactured parts will be repaired or replaced with new or factory-rebuilt parts at Seller's sole option. For clarity, this limited warranty is not valid for replacement or repair of any part that is not the original manufactured part. You are responsible for any costs incurred in removing and/or reinstalling the product or any component.

ALL IMPLIED WARRANTIES FOR THE PRODUCT, INCLUDING BUT NOT LIMITED TO ANY IMPLIED WARRANTIES OF MERCHANTABILITY AND FITNESS FOR A PARTICULAR PURPOSE, ARE LIMITED IN DURATION TO THE APPLICABLE LIMITED WARRANTY PERIOD SET FORTH ABOVE FOR THE RELATED COMPONENT(S), AND NO IMPLIED

WARRANTIES WILL EXIST OR APPLY AFTER SUCH PERIOD. Some States and Provinces do not allow limitations on how long an implied warranty lasts, so the above limitation may not apply to you. THIS LIMITED WARRANTY DOES NOT COVER NON-DEFECT DAMAGE, DAMAGE CAUSED BY IMPROPER INSTALLATION, OPERATION OR CARE (INCLUDING, BUT NOT LIMITED TO ABUSE, MISUSE, FAILURE TO PROVIDE REASONABLE AND NECESSARY MAINTENANCE, UNAUTHORIZED REPAIRS OR ANY ALTERATIONS TO THIS PRODUCT), LABOR CHARGES FOR REINSTALLING A REPAIRED OR REPLACED UNIT, REPLACEMENT OF CONSUMABLE ITEMS, OR UNITS INSTALLED FOR RESIDENTIAL USE. THIS LIMITED WARRANTY DOES NOT COVER ANY PROBLEMS WITH, OR RELATING TO, THE COMMERCIAL DOOR OR COMMERCIAL DOOR HARDWARE, INCLUDING BUT NOT LIMITED TO THE DOOR SPRINGS, DOOR ROLLERS, DOOR ALIGNMENT OR HINGES. THIS LIMITED WARRANTY ALSO DOES NOT COVER ANY PROBLEMS CAUSED BY INTERFERENCE. UNDER NO CIRCUMSTANCES SHALL SELLER BE LIABLE FOR CONSEQUENTIAL, INCIDENTAL OR SPECIAL DAMAGES ARISING IN CONNECTION WITH USE, OR INABILITY TO USE, THIS PRODUCT. IN NO EVENT SHALL SELLER'S LIABILITY FOR BREACH OF WARRANTY, BREACH OF CONTRACT, NEGLIGENCE OR STRICT LIABILITY EXCEED THE COST OF THE PRODUCT COVERED HEREBY. NO PERSON IS AUTHORIZED TO ASSUME FOR US ANY OTHER LIABILITY IN CONNECTION WITH THE SALE OF THIS PRODUCT.

Some states and provinces do not allow the exclusion or limitation of consequential, incidental or special damages, so the above limitation or exclusion may not apply to you. This limited warranty gives you specific legal rights, and you may also have other rights, which vary from state to state and province to province.

114-6042-000

114-6042-000 (Rev. F)

©2025 The Chamberlain Group LLC
LiftMaster and the LiftMaster logo are trademarks, service marks, and/or registered trademarks of The Chamberlain Group LLC. All rights reserved.
The Chamberlain Group LLC, 300 Windsor Drive, Oak Brook, IL, 60523, United States

HOW TO ORDER REPAIR PARTS

DEVANCO CANADA

19192 HAY ROAD, UNIT Q
SUMMERSTOWN,ON, K0C 2E0

TOLL FREE **1-855-931-3334**
WWW.DEVANCOCANADA.COM

WHEN ORDERING REPAIR PARTS
PLEASE SUPPLY THE FOLLOWING INFORMATION:

- ✓ **PART NUMBER**
- ✓ **DESCRIPTION**
- ✓ **MODEL NUMBER**